CONTRACT NO.	10152403
CONTROL	6294-03-001
PROJECT	RMC - 629403001
HIGHWAY	IH0010
COUNTY	EL PASO

CONTRACT

between

STATE OF TEXAS

and

E. G. L. CONSTRUCTION, INC.

for

IMPROVEMENTS OF 100.000 MILES

of

MOWING HIGHWAY RIGHT-OF-WAY

in

EL PASO COUNTY

This page intentionally left blank.

NOTIFICATION OF ADDENDUM

ADDENDUM NO. 1

DATED 10/09/2015

Control	**6294-03-001**
Project	**RMC - 629403001**
Highway	**IH0010**
County	**EL PASO**

Ladies/Gentlemen:

Attached please find an addendum on the above captioned project. Included in the attachment is an adendum notification which details the changes and the respective proposal pages which were added and/ or changed.

Except for new bid insert pages, it is unnecessary to return any of the pages attached.

Bid insert pages must be returned with the bid proposal submitted to the Department, unless your firm is submitting a bid using a computer print out. The computer print out must be changed to reflect the new bid item information.

Contractors and material suppliers, etc. who have previously been furnished informational proposals are not being furnished a copy of the addendum. If you have a subcontractor on the above project, please advise them of this addendum. Acknowledgment of this addendum is not requested if your company has been issued a proposal stamped “This Proposal Issued for Informational Purposes.”

You are required to acknowledge receipt of this addendum on the Addendum Acknowledgement form contained in your bid proposal by placing a mark in the box next to the respective addendum.

Failure to Acknowledge receipt of this addendum in your bid proposal will result in your bid not being read.

SUBJECT: PLANS AND PROPOSAL ADDENDUMS
PROJECT: RMC - 629403001 CONTROL: 6294-03-001
COUNTY: EL PASO
LETTING: 10/13/2015
REFERENCE NO: 1009

PROPOSAL ADDENDUMS

_ PROPOSAL COVER
_ BID INSERTS (SH. NO.:)
_ GENERAL NOTES (SH. NO.:
Article 7.3 Legal Relations and Resposibilities)
X SPEC LIST (SH. NO.: 24)
X SPECIAL PROVISIONS:
ADDED: 002-004, 007-003

DELETED:

_ SPECIAL SPECIFICATIONS:
ADDED:

DELETED:

_ OTHER:

DESCRIPTION OF ABOVE CHANGES
(INCLUDING PLANS SHEET CHANGES)

CONTROL : 6294-03-001
PROJECT : RMC - 629403001
HIGHWAY : IH0010
COUNTY : EL PASO

TEXAS DEPARTMENT OF TRANSPORTATION

GOVERNING SPECIFICATIONS AND SPECIAL PROVISIONS

ALL SPECIFICATIONS AND SPECIAL PROVISIONS APPLICABLE TO THIS PROJECT ARE IDENTIFIED AS FOLLOWS:

STANDARD SPECIFICATIONS: ADOPTED BY THE TEXAS DEPARTMENT OF TRANSPORTATION NOVEMBER 1, 2014. STANDARD SPECIFICATIONS ARE INCORPORATED INTO THE CONTRACT BY REFERENCE.

ITEMS 1 TO 9 INCL., GENERAL REQUIREMENTS AND COVENANTS
ITEM 502 BARRICADES, SIGNS, AND TRAFFIC HANDLING
ITEM 730 ROADSIDE MOWING

SPECIAL PROVISIONS: SPECIAL PROVISIONS WILL GOVERN AND TAKE PRECEDENCE OVER THE SPECIFICATIONS ENUMERATED HEREON WHEREVER IN CONFLICT THEREWITH.

SPECIAL PROVISION "SCHEDULE OF LIQUIDATED DAMAGES" (000---001)
SPECIAL PROVISION "NONDISCRIMINATION" (000---002)
SPECIAL PROVISION "IMPORTANT NOTICE TO CONTRACTORS" (000---010)
SPECIAL PROVISION TO ITEM 2 (002---004)
SPECIAL PROVISION TO ITEM 6 (006---001)
SPECIAL PROVISIONS TO ITEM 7 (007---001)(007---003)

SPECIAL SPECIFICATIONS:

GENERAL: THE ABOVE-LISTED SPECIFICATION ITEMS ARE THOSE UNDER WHICH PAYMENT IS TO BE MADE. THESE, TOGETHER WITH SUCH OTHER PERTINENT ITEMS, IF ANY, AS MAY BE REFERRED TO IN THE ABOVE-LISTED SPECIFICATION ITEMS, AND INCLUDING THE SPECIAL PROVISIONS LISTED ABOVE, CONSTITUTE THE COMPLETE SPECIFICATIONS FOR THIS PROJECT.

CONFLICT OF INTEREST CERTIFICATION

Pursuant to Texas Government Code Section 2261.252(b), the Department is prohibited from entering into contracts in which Department officers and employees have a financial interest.

By signing the Contract, the Contractor certifies that it is not prohibited from entering into a Contract with the Department as a result of a financial interest as defined under Texas Government Code Section 2261.252(b), and that it will exercise reasonable care and diligence to prevent any actions or conditions that could result in a conflict of interest with the Department.

The Contractor also certifies that none of the following individuals, nor any of their family members within the second degree of affinity or consanguinity, owns 1% or more interest or has a financial interest as defined under Texas Government Code Section 2261.252(b) in the Contractor:

- Any member of the Texas Transportation Commission; and
- The Department's Executive Director, General Counsel, Chief of Procurement and Field Support Operations, Director of Procurement, and Director of Contract Services.

Violation of this certification may result in action by the Department.

Special Provision to Item 2
Instructions to Bidders

Item 2, “Instructions to Bidders” of the Standard Specifications is amended with respect to the clauses cited below. No other clauses or requirements of this Item are waived or changed.

Article 2.3., “Issuing Proposal Forms,” is supplemented by the following:

The Department may not issue a proposal form if one or more of the following apply:

- The Contractor has been defaulted in accordance with Article 8.7., “Default of Contract” (a default for performance) on a previous Contract with the Department within the last 3 years.
- The Contractor is not in compliance with Texas Government Code Sections 2155.089 and 2262.055.

Special Provision to Item 7
Legal Relations and Responsibilities

Item 7, "Legal Relations and Responsibilities" of the Standard Specifications is amended with respect to the clauses cited below. No other clauses or requirements of this Item are waived or changed.

Article 7.3., "Laws To Be Observed," is supplemented by the following:

By entering into Contract, the Contractor agrees to provide or make available to the Department records, including electronic records related to the Contract for a period of 3 years after the final payment. Failure to provide access to the required documents may result in action by the Department.

STATE MAINTENANCE PROJECT NO.			
RMC 6294-03-001			
CONT	SECT	JOB	HIGHWAY
6294	03	001	IH 10, ETC
DIST	COUNTY		SHEET NO.
ELP	EL PASO		1

AREA OF DISTURBED SOIL = 3 ACRES

INDEX OF SHEETS

SHEET NO.	DESCRIPTION
	GENERAL
1	TITLE SHEET
2-5	GENERAL NOTES
6	ESTIMATE & QUANTITY
	TRAFFIC CONTROL PLAN STANDARDS
7	BC (1) -14
8	BC (2) -14
9	BC (3) -14
10	BC (4) -14
11	BC (5) -14
12	BC (6) -14
13	BC (7) -14
14	BC (8) -14
15	BC (9) -14
16	BC (10) -14
17	BC (11) -14
18	BC (12) -14
19	TCP (1-1) -12
20	RS-TCP-12

STATE OF TEXAS
DEPARTMENT OF TRANSPORTATION

PLANS OF PROPOSED
HIGHWAY ROUTINE MAINTENANCE CONTRACT

REQUIRED SIGNS SHALL BE IN ACCORDANCE WITH BC (1)- 14 THRU BC (12)- 14 AND THE "TEXAS MANUAL ON UNIFORM TRAFFIC CONTROL DEVICES".

TYPE OF WORK:
MOWING HIGHWAY RIGHT OF WAY

PROJECT NO.: RMC 6294-03-001

HIGHWAY: IH 10, ETC

LIMITS OF WORK: VARIOUS

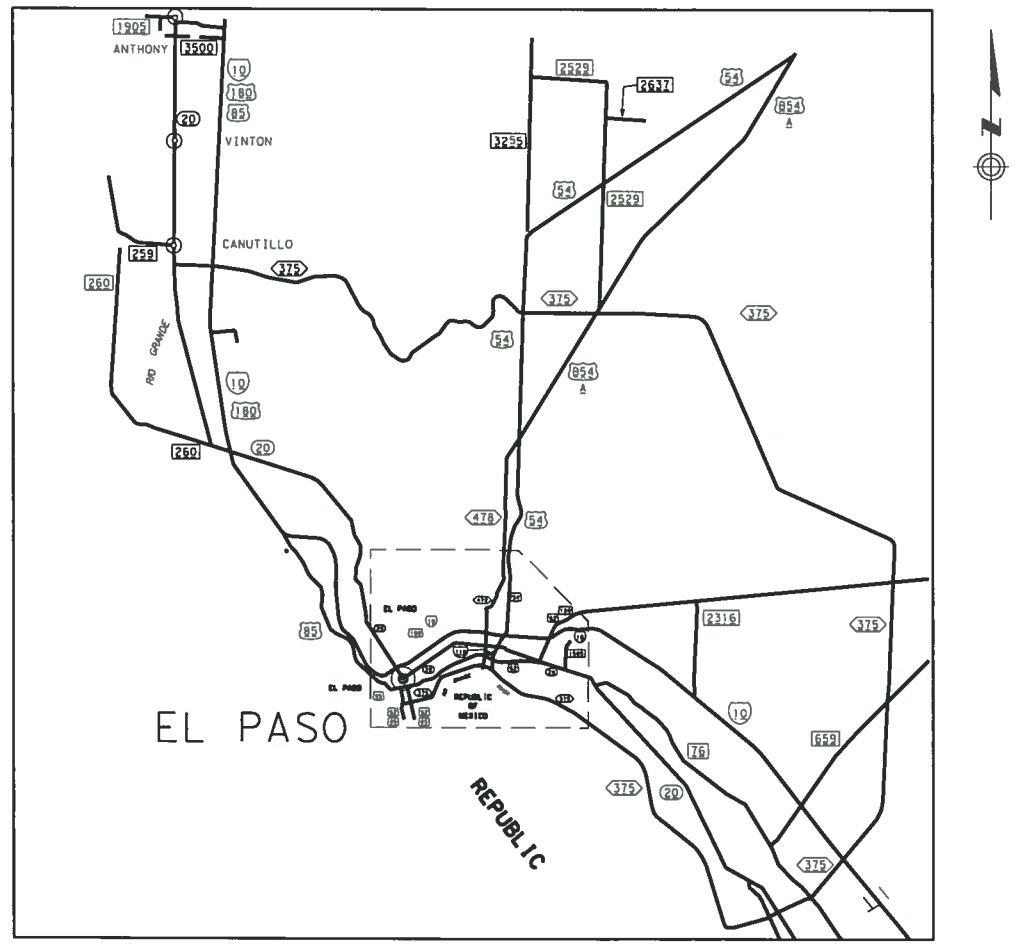

EXCEPTIONS: NONE???
EQUATIONS: NONE???
RAILROAD CROSSINGS: NONE???

THE STANDARD SHEETS SPECIFICALLY IDENTIFIED ABOVE HAVE BEEN ISSUED BY ME AND ARE APPLICABLE TO THIS PROJECT.

P.E. 8-25-15
DATE

SPECIFICATIONS ADOPTED BY THE TEXAS DEPARTMENT OF TRANSPORTATION, NOVEMBER 1, 2014 AND SPECIFICATION ITEMS INCLUDED IN THE CONTRACT SHALL GOVERN ON THIS PROJECT.

Texas Department of Transportation

RECOMMENDED FOR LETTING: 8-25-15
MAINTENANCE ENGINEER/CONTRACT MANAGER

RECOMMENDED FOR LETTING: 8/25/15
DIRECTOR OF OPERATIONS

07/27/2011 07:57 AM
TxDOT_Sheets_XM.cel

GENERAL NOTES:

General Project Description – This project consists of **mowing highway right of way** in El Paso County.

The Contract will be managed by the **West Area Office** with participating Maintenance Section Supervisor listed below:

Timothy Twomey, P.E., West AE	**Hector Granados, MSS**
4201 Hondo Pass Drive	4201 Hondo Pass Drive
El Paso, Texas 79904	El Paso, Texas 79904
(915) 757-5901	(915) 757-5921

Each Contract awarded by the Department stands on its own and as such, is separate from other Contracts. A Contractor awarded multiple Contracts, must be capable and sufficiently staffed to concurrently process any or all Contracts at the same time.

General Requirements
This Routine Maintenance Contract includes work on various highways.

Perform all work for this Contract in accordance with the Texas Department of Transportation Standard Specifications for Construction and Maintenance of Highways, Streets and Bridges (2014) and all applicable State Standards.

Maintain the entire project area in a neat and orderly manner throughout the duration of the work. This work will be subsidiary to the various bid items.

ITEM 2 - INSTRUCTIONS TO BIDDERS
This Contract includes plan sheets that are not part of the bid proposal.

View plans on-line or download from the web at:
http://www.txdot.gov/business/plansonline/plansonline.html

Order plans from any of the plan reproduction companies shown on the web at:
http://www.txdot.gov/business/letting-bids/repro-companies.html

Any questions concerning the preparation and submission of the proposal forms, contact:

Margie Cedillo
Contract Manager
Texas Department of Transportation
13301 Gateway Blvd. West
El Paso, Texas 79928
(915) 790-4367

Request a proposal from electronically from the Department's website:
http://www.txdot.gov/business-cq/pr.htm

Each completed proposal should be placed, together with the proposal guaranty or bid bond, in a sealed envelope with each proposal so marked as to indicate its contents. When submitted by mail, this envelope will be addressed to address shown above.

Proposals will be accepted at the Texas Department of Transportation El Paso District Headquarters at 13301 Gateway West Blvd., El Paso, Texas, until **1:30 P.M.**, **October 13, 2015** then publicly opened and read before the closing of business on the same date.

Or use the electronic bidding site:
http://www.txdot.gov/business/letting-bids/ebs.html

A bid summation will be available via telephone by contacting the El Paso Maintenance Management office at (915) 790-4367 or on-line at:
http://www.txdot.gov/business/bt.html

The bidder will be responsible for visiting the locations shown on Table 1 (West Area Office). If the bidder has any questions concerning the specification of work requirement and work locations prior to bidding the Contract, **contact the contract manager or managers** listed above.

ITEM 3 - AWARD AND EXECUTION
This Contract includes **site specific** work for Item 730.

Liquidated damages will be assessed for any working day charged beyond the authorized time. Time will be suspended between mowing cycles.

ITEM 8 - PROSECUTION AND PROGRESS
This project to be completed in **60** working days in accordance with **Section 8.3.1.4, "Standard Workweek."**

An individual mowing cycle is defined as approximately **thirty days** or as approved.

Liquidated damages will be assessed for any working day charged beyond the authorized time as per Section 8.6., "Failure to Complete Work on Time." Time will be suspended between mowing cycles.

The Contract becomes effective upon receipt of the work authorization letter. Upon issuance of work order, mobilize immediately. Multiple crews may be necessary to accomplish the Contract requirements. In the event the Contractor fails to commence work, the Department will provide written notification of time charge initiation to begin within seven calendar days.

Confine all operations to daylight hours with no work performed on Sunday or state holidays unless authorized by the Engineer.

Confine all operations to non-peak work hours defined as 9 A.M. to 4 P.M., Monday through Friday unless authorized by the Engineer.

Prior to beginning operations, schedule and attend a preconstruction conference with the Engineer. Provide the Department a written outline of the proposed sequence of work (Bar Chart Schedule and an estimated progress schedule).

In the event no cycles are activated within the Contract time, the Contract may be cancelled with no monetary compensation due to the Contractor and no further contractual obligations.

Existing pavement, utilities, structures, etc., damaged as a result of the operations, will be repaired at no additional cost to the Department.

ITEM 500 - MOBILIZATION

Mobilization will be considered subsidiary and will be included in the bid price for full width mowing highway right of way by the acre item.

ITEM 502 - BARRICADES, SIGNS AND TRAFFIC HANDLING

Barricades, signs and traffic handling will be considered subsidiary and included in the bid prices. All traffic control will be performed by the Contractor in compliance with the Texas Manual on Uniform Traffic Control Devices.

The Contractor and his employees will wear fluorescent orange safety vests and hard hats while outside vehicles within the Department's right of way and will comply with Item 7.2.4., "Public Safety and Convenience," and Item 7.2.6., "Barricades, Signs, and Traffic Handling."

The Contractor will place two signs, "Mowers Ahead," and maintain the proper distance.

TMAs shown on the Standard Sheets as **optional** will convert to **required** item and will be subsidiary to this Item. No payment will be made directly for any of these items if required on TCP plan sheets, as they will be considered subsidiary to the various bid items.

The Contractor will be required to furnish and place additional TMAs **not shown** on the TCP plan sheets. Use of TCP (1-1)-12 Standard is intended for weeding, handwork, and any other work near the edge of pavement where workers need protection. Use of TCP (1-1)-12 Standard and corresponding traffic control devices will be subsidiary to the bid Items.

Usage and locations of **additional** TMAs will be approved by the Engineer before operation and will not be subsidiary to the bid Items; it will be paid under Item 502-6015.

Truck-Mounted Attenuators (TMA) must be NCHRP 350 or MASH compliant and will require pre-approved by the Department. The supporting vehicle will have a gross (i.e., ballasted) vehicular weight of 20,000 ± 1,000 pounds unless another weight is recommended by the TMA manufacturer. Use of a vehicle not meeting the gross (i.e., ballasted) vehicular weight of 20,000 ± 1,000 pounds to mount the TMA, must be approved by the Engineer. Attachment of TMA will be in accordance with manufacturer's recommendations.

NCHRP 350 **Level 3** compliant TMAs may be used on any Department facility.

NCHRP 350 Test Level 3 Compliant:

- U-MAD Cushion 100K Impact TMA (Barrier Systems, Inc.)
- U-MAD 100k Trailer TMA (Barrier Systems, Inc.)
- Alpha 100K (Energy Absorption Systems, Inc.)
- SAFE-STOP™ (Energy Absorption Systems, Inc.)
- SAFE-STOP™ 180 TMA (Energy Absorption Systems, Inc.)
- SAFE-STOP™ Trailer TMA (Energy Absorption Systems, Inc.)
- Vorteq TL-3 Trailer TMA (Energy Absorption Systems, Inc.)
- RAM 100K (Renco, Inc.)
- SS90 HD TMA (Trinity Highway Products)
- Scorpion C 10000 (TrafFix Devices, Inc.)
- Scorpion Trailer Attenuator (17.3' long) (TrafFix Devices, Inc.)
- TTMA-100 Trailer TMA (Gregory Industries, Inc.)

NCHRP 350 **Level 2** compliant TMAs are approved for use only on roadways with regulatory speed limits of 45 mph or less.

NCHRP 350 Test Level 2 Compliant

- Alpha 70K (Energy Absorption Systems, Inc.)
- Ren-Gard 815 (Renco, Inc.)
- Scorpion A 10000 (TrafFix Devices, Inc.)
- U-MAD 70k Trailer TMA (Barrier Systems, Inc.)

For additional information pertaining to channelization, signing, spacing details, and flagging procedures required to regulate, warn, and guide traffic through project, refer to the "Barricade and Construction" Standards and to the current *Texas Manual on Uniform Traffic Control Devices.*

ITEM 730 - ROADSIDE MOWING

The Department will issue a written notice to begin a mowing cycle. The Contractor will be provided the number of acres required to be mowed, the number of working days allowed to complete the mowing cycle, and the date when time charges for the mowing cycle will start.

The Contractor will be responsible for mowing all locations to the satisfaction of the Department including all gaps, slivers and around all appurtenances for both strip mowing and full-width mowing segments to be considered for payment by the cycle.

Provide adequate equipment meeting all requirements, to average **34** acres per day for full-width mowing.

For estimation purposes, strip mowing, full-width mowing, and cycles are defined as follows:

- Strip Mowing (15 ft. width)
- Full-Width Mowing (30 ft. width)

Cycle is the number of working days allotted to complete a mowing cycle. The number of working days will be determined by dividing the total number of acres required for the mowing cycle by average rate 34 acres per day for full-width. A fraction of a day will be rounded up to the next whole number. Additional working days for added acres will be determined and allowed by the Engineer based on the required mowing acres per normal working day as stated above. ***The cycle provided is based on historical data and are not guaranteed.***

The Department reserves the right to reduce or increase the number of cycles within established guidelines provided in the Standard Specifications.

Work locations are shown on Table 1.

Table 1
West Area Office Mowing Locations

HIGHWAY	FROM	MM/RM	TO	MM/RM	TOTAL MILES	CYCLES	STRIP MOWING (ACRES)	FULL-WIDTH (ACRES)
IH10	TEXAS/NM STATE LINE	00+0.00	SUNLAND PARK DRIVE	13+0.00	13	2	48	144
FM1905	TEXAS/NM STATE LINE	12+0.00	JCT IH10	14+0.00	2	2	5	0
SH20	TEXAS/NM STATE LINE	308+0.00	MESA ST.	319+0.00	11	2	40	0
FM259	TEXAS/NM STATE LINE	10+0.00	DONIPHAN DR.	12+0.00	2	2	5	0
LP375	ZARAGOZA RD.	48+0.00	SANTA FE ST.	61+0.00	13	2	0	58
US54	ELLERTHORPE AVE.	25+0.80	TEXAS/NM STATE LINE	40+0.00	14.2	2	0	55
BU54	TIGER EYE DR.	32+0.25	TEXAS/NM STATE LINE	39+0.00	6.75	2	25	0
FM2637	JCT FM2529	24+0.40	END OF PAVEMENT	28+0.00	3.6	2	3	0
FM3255	TEXAS/NM STATE LINE	308+0.00	JCT US54	313+0.00	5	2	20	0
FM2529	JCT FM3255	310+0.00	US 54	315+0.00	5	2	10	0
LP375	IH10	11+0.00	DESERT GARDEN AT THE WILDERNESS MUSEUM	21+0.00	10	2	37	0
SS601	FRED WILSON	20+0.00	LP375	27+0.00	7	2	0	51
SS16	TALBOT AVE.	n/a	DONIPHAN DR.	n/a	1.3	2	4	0
TOTAL ACRES **PER** CYCLE							197	308
TOTAL ACRES							394	616

MM=MILE MARKER (IH 10 ONLY)
RM=REFERENCE MARKER

NOTE: The approximate quantities determined for this project are for information only and are not to be considered as actual quantities. Contractors are hereby instructed to assure themselves of the actual conditions of work area before bidding. It is specifically understood that overruns/underruns of estimated quantities will not be considered as a basis for a claim.

The Department will inspect the equipment to ensure that all mowers are adjusted properly for the correct mowing height and meet all safety requirements prior to beginning mowing operations and at any time during the Contract period.

For this Contract, provide at least 3 mowers in operation at all times, unless otherwise approved.

In some locations a maximum 7 ft. mower deck will be required to provide for a safe mowing operation on narrow roadway and right of way widths as directed.

All vegetation within the mowing widths will be cleanly cut to the specified height.

Entire width of medians and outer separations (outer separation is defined as the space between the interstate outside lane and the frontage road) will be mowed full width.

The rate of transition between the designated strip width and other safety and transition mowing will be 1:6 (width: parallel to highway).

Transition mowing will be those areas outside the normal strip mow area required to delineate fixed objects adjacent to the roadway such as signs, bridge ends, culvert ends, etc.

Safety mowing will be those areas outside the normal strip mow area required, in the opinion of the Engineer, to protect the traveling public. Included are areas adjacent to driveways, intersecting roadways, inside curves, etc.

Transition and safety mowing (divided or undivided roadway) for the purpose of this Contract, all transition mowing around signs will start and terminate at least 100 ft. in advance of and beyond the signs. All safety transitions at private driveways will start and terminate at least 50 ft. in advance of and beyond the driveways. Transitions at intersecting roadways will start and terminate at least 500 ft. in advance and beyond the intersection. Transitions at curves will start and terminate at least 100 ft. in advance and beyond the curves on the inside of the curve. The Contractor will transition around culvert ends in such a manner so as to make them visible from the roadway. The transition will start and stop at least 100 ft. in advance of and beyond the culvert. The width around the ends of the culvert will be at least 7 ft. All transitions will be mowed as stated above or as directed.

In front of private dwellings, churches, schools, developed areas, urban areas, within the city limits, small communities and cultivated fields; strip mowing (divided and undivided roadways) will include the area from the pavement edge to the right of way line plus the areas for transition and safety mowing.

When mowing along guardrail, the Contractor will cut all vegetation between the pavement edge and the face of the guardrail and also mow at least 7 ft. strip behind the guardrail.

Each right of way control section will be completed prior to beginning work on the next control section right of way, unless otherwise approved.

Provide a slope mower in areas too steep to mow with conventional equipment. Provide equipment capable of mowing the slope while traveling on the pavement. Do not damage existing slope surfaces or injure existing growth.

Non-Mow Areas are marked by delineator posts. Contact the Engineer for any questions concerning location.

Using an approved power washer, wash all debris off of mowers and tractors before moving from one county to another.

All equipment will be cleaned of all foreign matter seeds, plants, insects, etc., before work begins on this Contract.

Repair damage caused by the Contractor's operations, to the highway right of way, signs, fences, delineators, plant materials or any other appurtenances, part of or adjacent to the highway facility. The Department has the authority to charge the Contractor for any damage not repaired.

Mowers will be adjusted for a cutting height of 6 in. Where hand trimming is required, the vegetation will be cut to a height of approximately 3 in.

All hand trimming will be completed within 24 hr. after mowing is completed on any section of highway right of way.

No additional compensation will be made to the Contractor for pre-existing conditions or excessive growth between cycles. The Contractor will be available throughout the one-year duration of the Contract to perform items under this Contract.

The Contractor will <u>not</u> be allowed to mow the right of way in the El Paso County with gas powered equipment on any Ozone Action Day. The Department will grant an additional day for the Ozone Action Day.

ESTIMATE SUMMARY

RMC 629403001
CSJ 6294-03-001
VARIOUS LOCATIONS
MOWING OF RIGHT OF WAY

EST.	FINAL	EST.	FINAL	EST.	FINAL	EST.	FINAL	EST.	FINAL	ALT	ITEM-CODE ITEM NO.	DESC CODE	SP NO	DESCRIPTION	UNIT	TOTAL EST.	FINAL
								25.00			502	6015		FURN. ADDITIONAL TRUCKMOUNT ATTENUATOR	HR	25.00	
								394.00			730	6001		STRIP MOWING	AC	394.00	
								616.00			730	6002		FULL - WIDTH MOWING	AC	616.00	

ESTIMATE & QUANTITY SHEET

STATE DIST. NO.	COUNTY	PROJECT NO.	SHEET NO.
24	EL PASO	RMC 629403001	6

BARRICADE AND CONSTRUCTION (BC) STANDARD SHEETS GENERAL NOTES:

1. The Barricade and Construction Standard Sheets (BC sheets) are intended to show typical examples for placement of temporary traffic control devices, construction pavement markings, and typical work zone signs. The information contained in these sheets meet or exceed the requirements shown in the "Texas Manual on Uniform Traffic Control Devices" (TMUTCD).

2. The development and design of the Traffic Control Plan (TCP) is the responsibility of the Engineer.

3. The Contractor may propose changes to the TCP that are signed and sealed by a licensed professional engineer for approval. The Engineer may develop, sign and seal Contractor proposed changes.

4. The Contractor is responsible for installing and maintaining the traffic control devices as shown in the plans. The Contractor may not move or change the approximate location of any device without the approval of the Engineer.

5. Geometric design of lane shifts and detours should, when possible, meet the applicable design criteria contained in manuals such as the American Association of State Highway and Transportation Officials (AASHTO), "A Policy on Geometric Design of Highways and Streets," the TxDOT "Roadway Design Manual" or engineering judgment.

6. When projects abut, the Engineer(s) may omit the END ROAD WORK, TRAFFIC FINES DOUBLE, and other advance warning signs if the signing would be redundant and the work areas appear continuous to the motorists. If the adjacent project is completed first, the Contractor shall erect the necessary warning signs as shown on these sheets, the TCP sheets or as directed by the Engineer. The BEGIN ROAD WORK NEXT X MILES sign shall be revised to show appropriate work zone distance.

7. The Engineer may require duplicate warning signs on the median side of divided highways where median width will permit and traffic volumes justify the signing.

8. All signs shall be constructed in accordance with the details found in the "Standard Highway Sign Designs for Texas," latest edition. Sign details not shown in this manual shall be shown in the plans or the Engineer shall provide a detail to the Contractor before the sign is manufactured.

9. The temporary traffic control devices shown in the illustrations of the BC sheets are examples. As necessary, the Engineer will determine the most appropriate traffic control devices to be used.

10. As shown on BC(2), the OBEY WARNING SIGNS STATE LAW sign, STAY ALERT TALK OR TEXT LATER (see Sign Detail G20-10T) and the WORK ZONE TRAFFIC FINES DOUBLE sign with plaque shall be erected in advance of the CSJ limits. However, the TRAFFIC FINES DOUBLE sign will not be required on projects consisting solely of mobile operation work, such as striping or milling edgeline rumble strips. The BEGIN ROAD WORK NEXT X MILES, CONTRACTOR and END ROAD WORK signs shall be erected at or near the CSJ limits.

11. Except for devices required by Note 10, traffic control devices should be in place only while work is actually in progress or a definite need exists.

12. The Engineer has the final decision on the location of all traffic control devices.

13. Inactive equipment and work vehicles, including workers' private vehicles must be parked away from travel lanes. They should be as close to the right-of-way line as possible, or located behind a barrier or guardrail, or as approved by the Engineer.

WORKER SAFETY APPAREL NOTES:

1. Workers on foot who are exposed to traffic or to construction equipment within the right-of-way shall wear high-visibility safety apparel meeting the requirements of ISEA "American National Standard for High-Visibility Apparel," or equivalent revisions, and labeled as ANSI 107-2004 standard performance for Class 2 or 3 risk exposure. Class 3 garments should be considered for high traffic volume work areas or night time work.

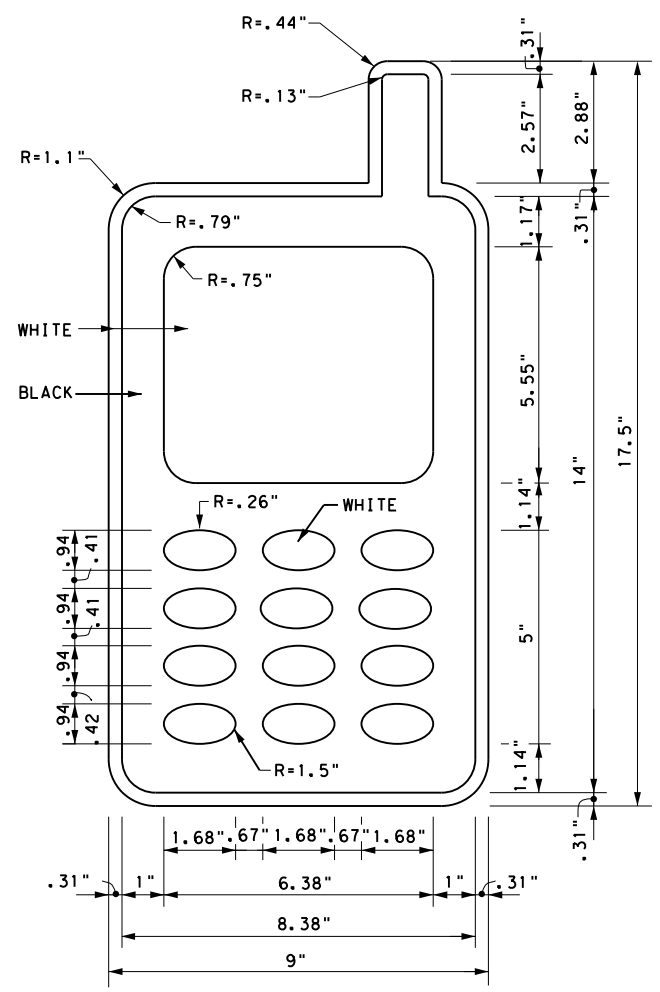

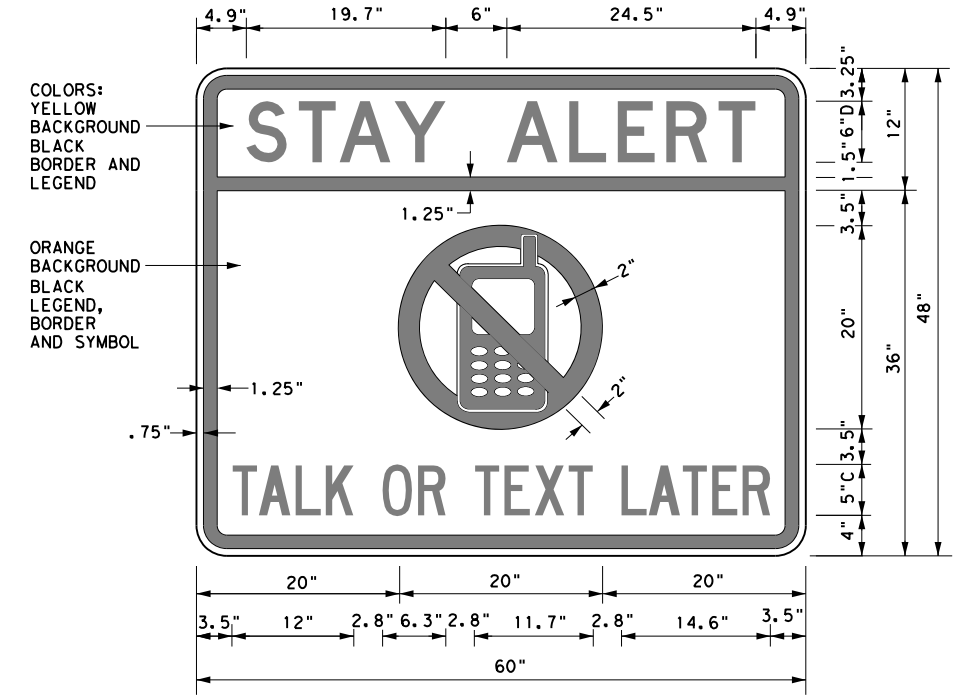

3.0" Radius, 1.25" Border, 0.75" Indent, Black on Yellow;
[STAY ALERT] Font: D
3.0" Radius, 1.25" Border, 0.75" Indent, Black on Orange;
[TALK OR TEXT LATER] Font: C specified length;

SIGN DETAIL (G20-10T)

Only pre-qualified products shall be used. The "Compliant Work Zone Traffic Control Devices List" (CWZTCD) describes pre-qualified products and their sources and may be found on-line at the web address given below or by contacting:

Texas Department of Transportation
Traffic Operations Division - TE
Phone (512) 416-3118

THE DOCUMENTS BELOW CAN BE FOUND ON-LINE AT http://www.txdot.gov
COMPLIANT WORK ZONE TRAFFIC CONTROL DEVICES LIST (CWZTCD)
DEPARTMENTAL MATERIAL SPECIFICATIONS (DMS)
MATERIAL PRODUCER LIST (MPL)
ROADWAY DESIGN MANUAL - SEE "MANUALS (ONLINE MANUALS)"
STANDARD HIGHWAY SIGN DESIGNS FOR TEXAS (SHSD)
TEXAS MANUAL ON UNIFORM TRAFFIC CONTROL DEVICES (TMUTCD)
TRAFFIC ENGINEERING STANDARD SHEETS

Texas Department of Transportation — Traffic Operations Division Standard

BARRICADE AND CONSTRUCTION GENERAL NOTES AND REQUIREMENTS

BC(1)-14

FILE: bc-14.dgn	DN: TxDOT	CK: TxDOT	DW: TxDOT	CK: TxDOT
© TxDOT November 2002	MAINTENANCE PROJECT NO.		HIGHWAY	
REVISIONS 4-03 5-10 8-14 9-07 7-13	RMC 6294-03-001		IH 10, ETC	
	DIST	COUNTY		SHEET NO.
	ELP	EL PASO		7

DISCLAIMER:
The use of this standard is governed by the "Texas Engineering Practice Act". No warranty of any kind is made by TxDOT for any purpose whatsoever. TxDOT assumes no responsibility for the conversion of this standard to other formats or for incorrect results or damages resulting from its use.

DATE: 8/25/2015 12:55:59 PM
FILE: T:\ELPMAINT\Microstation Projects\6294-03-001_Mowing_ELP_W_FY15\Design Files\bc-14_5thru16.dgn

DISCLAIMER:
The use of this standard is governed by the "Texas Engineering Practice Act". No warranty of any kind is made by TxDOT for any purpose whatsoever. TxDOT assumes no responsibility for the conversion of this standard to other formats or for incorrect results or damages resulting from its use.

DATE: 8/25/2015 12:57:38 PM
FILE: T:\ELPMAINT\Microstation Projects\6294-03-001_Mowing_ELP_W_FY15\Design Files\bc-14_5thru6.dgn

TYPICAL LOCATION OF CROSSROAD SIGNS

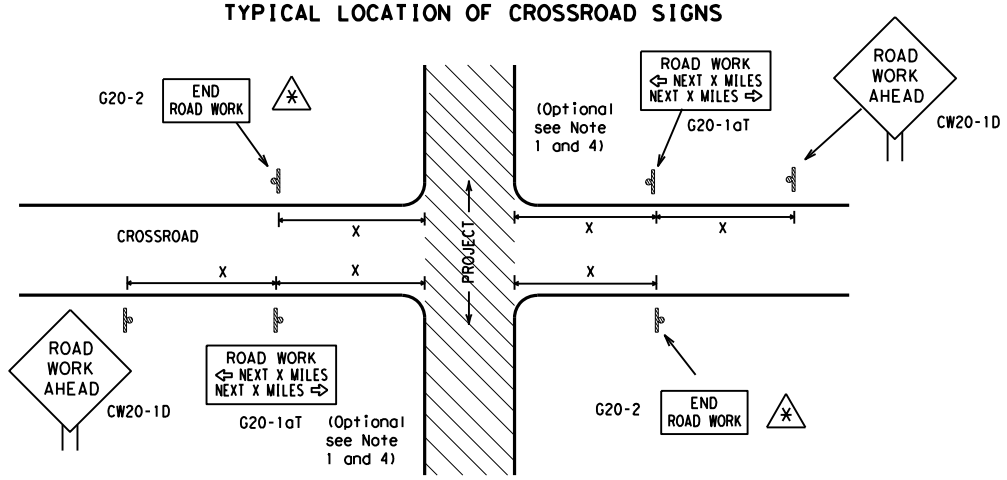

✱ May be mounted on back of "ROAD WORK AHEAD"(CW20-1D) sign with approval of Engineer. (See note 2 below)

1. The typical minimum signing on a crossroad approach should be a "ROAD WORK AHEAD" (CW20-1D)sign and a (G20-2) "END ROAD WORK" sign, unless noted otherwise in plans.
2. The Engineer may use the reduced size 36" x 36" ROAD WORK AHEAD (CW20-1D) sign mounted back to back with the reduced size 36" x 18" "END ROAD WORK"(G20-2) sign on low volume crossroads (see Note 4 under "Typical Construction Warning Sign Size and Spacing"). See the "Standard Highway Sign Designs for Texas" manual for sign details. The Engineer may omit the advance warning signs on low volume crossroads. The Engineer will determine whether a road is low volume. This information shall be shown in the plans.
3. Based on existing field conditions, the Engineer/Inspector may require additional signs such as FLAGGER AHEAD, LOOSE GRAVEL, or other appropriate signs. When additional signs are required, these signs will be considered part of the minimum requirements. The Engineer/Inspector will determine the proper location and spacing of any sign not shown on the BC sheets, Traffic Control Plan sheets or the Work Zone Standard Sheets.
4. The "ROAD WORK NEXT X MILES"(G20-1aT)sign shall be required at high volume crossroads to advise motorists of the length of construction in either direction from the intersection. The Engineer will determine whether a roadway is considered high volume.
5. Additional traffic control devices may be shown elsewhere in the plans for higher volume crossroads.
6. When work occurs in the intersection area, appropriate traffic control devices, as shown elsewhere in the plans or as determined by the Engineer/Inspector, shall be in place.

T-INTERSECTION

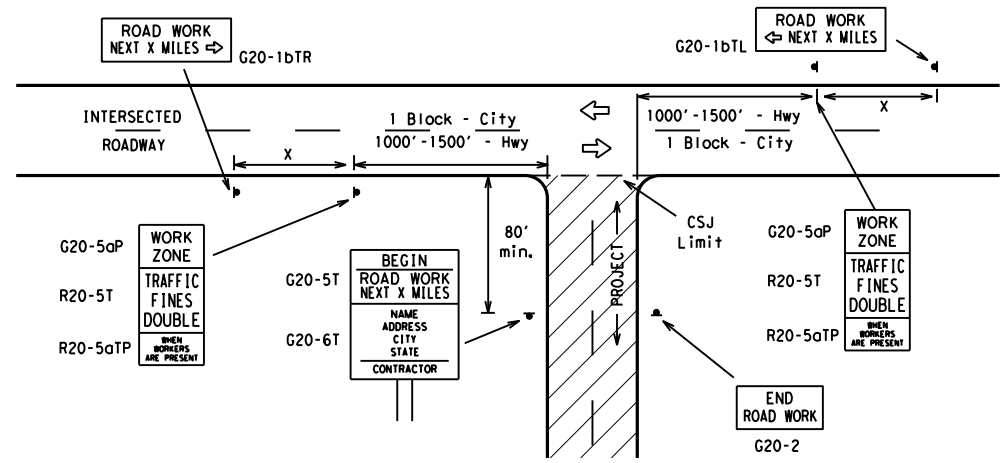

CSJ LIMITS AT T-INTERSECTION

1. The Engineer will determine the types and location of any additional traffic control devices, such as a flagger and accompanying signs, or other signs, that should be used when work is being performed at or near an intersection.
2. If construction closes the road at a T-intersection the Contractor shall place the "CONTRACTOR NAME"(G20-6T) sign behind the Type 3 Barricades for the road closure (see BC(10) also). The "ROAD WORK NEXT X MILES" left arrow(G20-1bTL) and "ROAD WORK NEXT X MILES" right arrow (G20-1bTR)" signs shall be replaced by the detour signing called for in the plans.

TYPICAL CONSTRUCTION WARNING SIGN SIZE AND SPACING[1,5,6]

SIZE

Sign Number or Series	Conventional Road	Expressway/ Freeway
CW20[4] CW21 CW22 CW23 CW25	48" x 48"	48" x 48"
CW1, CW2, CW7, CW8, CW9, CW11, CW14	36" x 36"	48" x 48"
CW3, CW4, CW5, CW6, CW8-3, CW10, CW12	48" x 48"	48" x 48"

SPACING

Posted Speed	Sign Spacing "X" △
MPH	Feet (Apprx.)
30	120
35	160
40	240
45	320
50	400
55	500[2]
60	600[2]
65	700[2]
70	800[2]
75	900[2]
80	1000[2]
✱	✱[3]

✱ For typical sign spacings on divided highways, expressways and freeways, see Part 6 of the "Texas Manual on Uniform Traffic Control Devices" (TMUTCD) typical application diagrams or TCP Standard Sheets.

△ Minimum distance from work area to first Advance Warning sign nearest the work area and/or distance between each additional sign.

GENERAL NOTES

1. Special or larger size signs may be used as necessary.
2. Distance between signs should be increased as required to have 1500 feet advance warning.
3. Distance between signs should be increased as required to have 1/2 mile or more advance warning.
4. 36" x 36" "ROAD WORK AHEAD" (CW20-1D)signs may be used on low volume crossroads at the discretion of the Engineer. See Note 2 under "Typical Location of Crossroad Signs".
5. Only diamond shaped warning sign sizes are indicated.
6. See sign size listing in "TMUTCD", Sign Appendix or the "Standard Highway Sign Designs for Texas" manual for complete list of available sign design sizes.

WORK AREAS IN MULTIPLE LOCATIONS WITHIN CSJ LIMITS

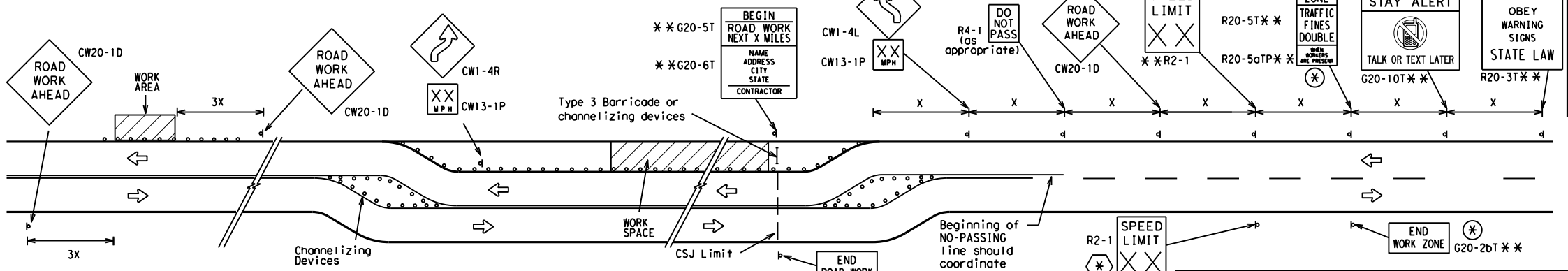

When extended distances occur between minimal work spaces, the Engineer/Inspector should ensure additional "ROAD WORK AHEAD"(CW20-1D)signs are placed in advance of these work areas to remind drivers they are still within the project limits. See the applicable TCP sheets for exact location and spacing of signs and channelizing devices.

SAMPLE LAYOUT OF SIGNING FOR WORK BEGINNING AT THE CSJ LIMITS

SAMPLE LAYOUT OF SIGNING FOR WORK BEGINNING DOWNSTREAM OF THE CSJ LIMITS

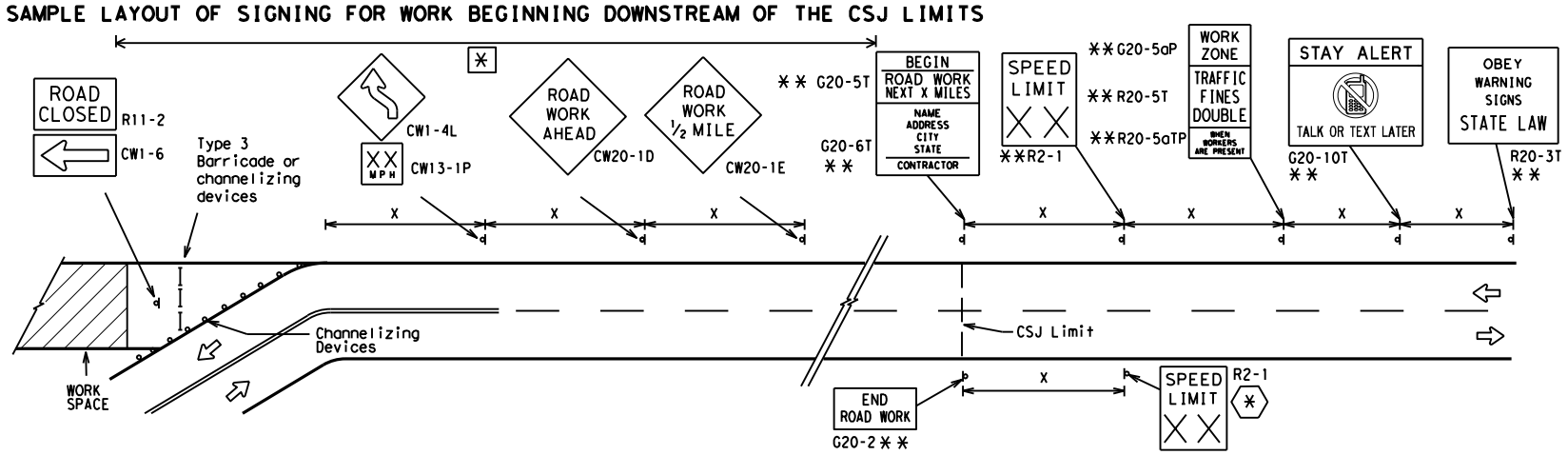

NOTES

The Contractor shall determine the appropriate distance to be placed on the G20-1 series signs and "BEGIN ROAD WORK NEXT X MILES"(G20-5T)sign for each specific project. This distance shall replace the "X" and shall be rounded to the nearest whole mile with the approval of the Engineer. No decimals shall be used.

(✱) The "BEGIN WORK ZONE"(G20-9TP) and "END WORK ZONE" (G20-2bT) shall be used as shown on the sample layout when advance signs are required outside the CSJ Limits. They inform the motorist of entering or leaving a part of the work zone lying outside the CSJ Limits where traffic fines may double if workers are present.

✱✱ Required CSJ Limit signing. See Note 10 on BC(1). TRAFFIC FINES DOUBLE signs will not be required on projects consisting solely of mobile operations work.

[✱] Area for placement of "ROAD WORK AHEAD" (CW20-1D)sign and other signs or devices as called for on the Traffic Control Plan.

(✱) Contractor will install a regulatory speed limit sign at the end of the work zone.

LEGEND	
⊢⊣	Type 3 Barricade
○ ○ ○	Channelizing Devices
▬	Sign
X	See Typical Construction Warning Sign Size and Spacing chart or the TMUTCD for sign spacing requirements.

SHEET 2 OF 12

Texas Department of Transportation — Traffic Operations Division Standard

BARRICADE AND CONSTRUCTION PROJECT LIMIT

BC(2)-14

FILE: bc-14.dgn	DN: TxDOT	CK: TxDOT	DW: TxDOT	CK: TxDOT
© TxDOT November 2002	MAINTENANCE PROJECT NO.		HIGHWAY	
REVISIONS 9-07 8-14 7-13	RMC 6294-03-001		IH 10, ETC	
	DIST	COUNTY		SHEET NO.
	ELP	EL PASO		8

TYPICAL APPLICATION OF WORK ZONE SPEED LIMIT SIGNS

Work zone speed limits shall be regulatory, established in accordance with the "Procedures for Establishing Speed Zones," and approved by the Texas Transportation Commission, or by City Ordinance when within Incorporated City Limits.

Reduced speeds should only be posted in the vicinity of work activity and not throughout the entire project.

Regulatory work zone speed signs (R2-1) shall be removed or covered during periods when they are not needed.

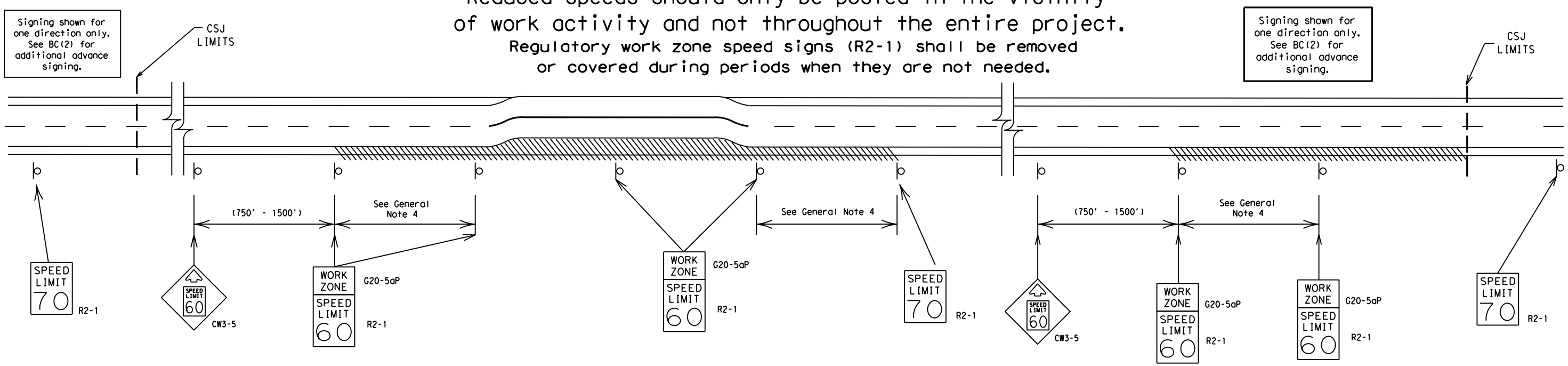

GUIDANCE FOR USE:

LONG/INTERMEDIATE TERM WORK ZONE SPEED LIMITS

This type of work zone speed limit should be included on the design of the traffic control plans when restricted geometrics with a lower design speed are present in the work zone and modification of the geometrics to a higher design speed is not feasible.

Long/Intermediate Term Work Zone Speed Limit signs, when approved as described above, should be posted and visible to the motorist when work activity is present. Work activity may also be defined as a change in the roadway that requires a reduced speed for motorists to safely negotiate the work area, including:

a) rough road or damaged pavement surface
b) substantial alteration of roadway geometrics (diversions)
c) construction detours
d) grade
e) width
f) other conditions readily apparent to the driver

As long as any of these conditions exist, the work zone speed limit signs should remain in place.

SHORT TERM WORK ZONE SPEED LIMITS

This type of work zone speed limit may be included on the design of the traffic control plans when workers or equipment are not behind concrete barrier, when work activity is within 10 feet of the traveled way or actually in the travelled way.

Short Term Work Zone Speed Limit signs should be posted and visible to the motorists only when work activity is present. When work activity is not present, signs shall be removed or covered.
(See Removing or Covering on BC(4)).

GENERAL NOTES

1. Regulatory work zone speed limits should be used only for sections of construction projects where speed control is of major importance.
2. Regulatory work zone speed limit signs shall be placed on supports at a 7 foot minimum mounting height.
3. Speed zone signs are illustrated for one direction of travel and are normally posted for each direction of travel.
4. Frequency of work zone speed limit signs should be:
   40 mph and greater 0.2 to 2 miles
   35 mph and less 0.2 to 1 mile
5. Regulatory speed limit signs shall have black legend and border on a white reflective background (See "Reflective Sheeting" on BC(4)).
6. Fabrication, erection and maintenance of the"ADVANCE SPEED LIMIT"(CW3-5)sign, "WORK ZONE"(G20-5aP) plaque and the "SPEED LIMIT"(R2-1)signs shall not be paid for directly, but shall be considered subsidiary to Item 502.
7. Turning signs from view, laying signs over or down will not be allowed, unless as otherwise noted under "REMOVING OR COVERING" on BC(4).
8. Techniques that may help reduce traffic speeds include but are not limited to:
   A. Law enforcement.
   B. Flagger stationed next to sign.
   C. Portable changeable message sign (PCMS).
   D. Low-power (drone) radar transmitter.
   E. Speed monitor trailers or signs.
9. Speeds shown on details above are for illustration only.
   Work Zone Speed Limits should only be posted as approved for each project.
10. For more specific guidance concerning the type of work, work zone conditions and factors impacting allowable regulatory construction speed zone reduction see TxDOT form #1204 in the TxDOT e-form system.

DISCLAIMER:
The use of this standard is governed by the "Texas Engineering Practice Act". No warranty of any kind is made by TxDOT for any purpose whatsoever. TxDOT assumes no responsibility for the conversion of this standard to other formats or for incorrect results or damages resulting from its use.

DATE: 8/25/2015 12:58:32 PM
FILE: T:\ELPMAINT\Microstation Projects\6294-03-001_Mowing_ELP_W_FY15\Design Files\BC-914_5thru16.dgn

SHEET 3 OF 12

Texas Department of Transportation — Traffic Operations Division Standard

BARRICADE AND CONSTRUCTION WORK ZONE SPEED LIMIT

BC(3)-14

FILE: bc-14.dgn	DN: TxDOT	CK: TxDOT	DW: TxDOT	CK: TxDOT
© TxDOT November 2002	MAINTENANCE PROJECT NO.		HIGHWAY	
REVISIONS 9-07 8-14 7-13	RMC 6294-03-001		IH 10, ETC	
	DIST	COUNTY	SHEET NO.	
	ELP	EL PASO	9	

DISCLAIMER:
The use of this standard is governed by the "Texas Engineering Practice Act". No warranty of any kind is made by TxDOT for any purpose whatsoever. TxDOT assumes no responsibility for the conversion of this standard to other formats or for incorrect results or damages resulting from its use.

DATE: 8/25/2015 12:59:21 PM
FILE: T:\ELPMAINT\Microstation Projects\6294-03-001_Mowing_ELP_W_FY15\Design Files\bc-14_5thru16.dgn

TYPICAL MINIMUM CLEARANCES FOR LONG TERM AND INTERMEDIATE TERM SIGNS

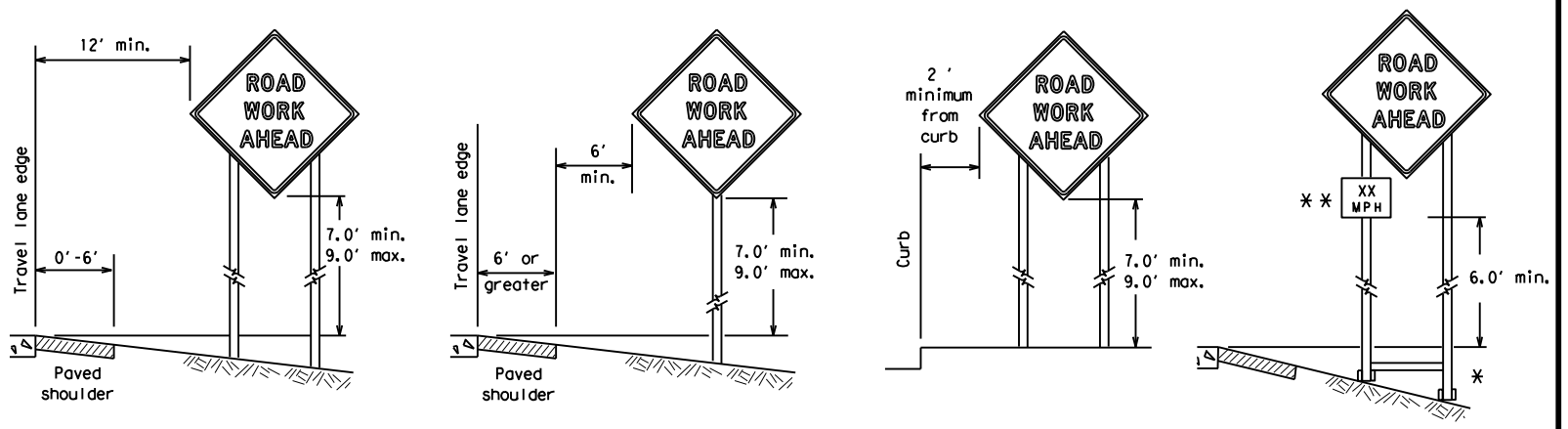

✱ When placing skid supports on unlevel ground, the leg post lengths must be adjusted so the sign appears straight and plumb. Objects shall NOT be placed under skids as a means of leveling.

✱✱ When plaques are placed on dual-leg supports, they should be attached to the upright nearest the travel lane. Supplemental plaques (advisory or distance) should not cover the surface of the parent sign.

ATTACHMENT FOR SIGN SUPPORTS

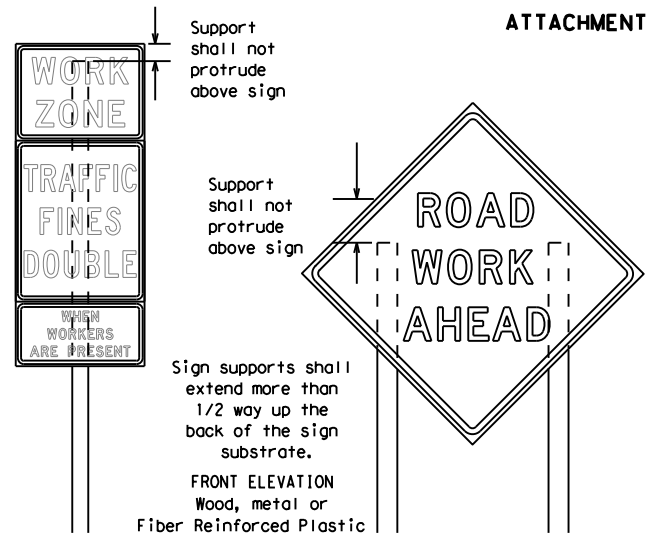

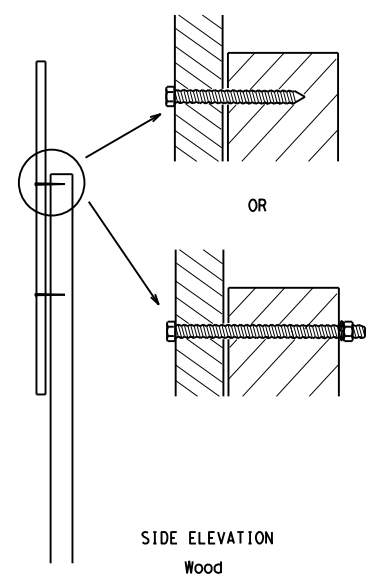

Attachment to wooden supports will be by bolts and nuts or screws. Use TxDOT's or manufacturer's recommended procedures for attaching sign substrates to other types of sign supports

Nails shall NOT be allowed. Each sign shall be attached directly to the sign support. Multiple signs shall not be joined or spliced by any means. Wood supports shall not be extended or repaired by splicing or other means.

Splicing embedded perforated square metal tubing in order to extend post height will only be allowed when the splice is made using four bolts, two above and two below the spice point. Splice must be located entirely behind the sign substrate, not near the base of the support. Splice insert lengths should be at least 5 times nominal post size, centered on the splice and of at least the same gauge material.

STOP/SLOW PADDLES

1. STOP/SLOW paddles are the primary method to control traffic by flaggers. The STOP/SLOW paddle size should be 24" x 24" as detailed below.
2. When used at night, the STOP/SLOW paddle shall be retroreflectorized.
3. STOP/SLOW paddles may be attached to a staff with a minimum length of 6' to the bottom of the sign.
4. Any lights incorporated into the STOP or SLOW paddle faces shall only be as specifically described in Section 6E.03 Hand Signaling Devices in the TMUTCD.

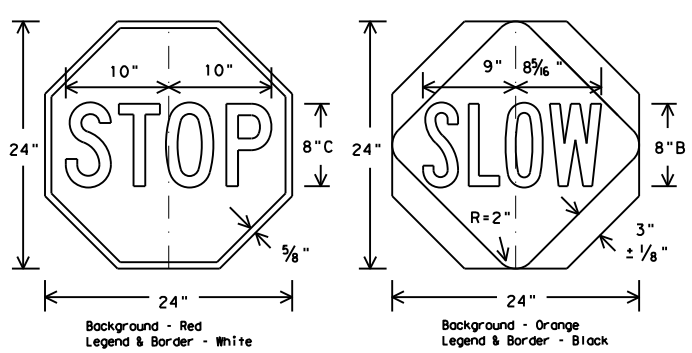

CONTRACTOR REQUIREMENTS FOR MAINTAINING PERMANENT SIGNS WITHIN THE PROJECT LIMITS

1. Permanent signs are used to give notice of traffic laws or regulations, call attention to conditions that are potentially hazardous to traffic operations, show route designations, destinations, directions, distances, services, points of interest, and other geographical, recreational, or cultural information. Drivers proceeding through a work zone need the same, if not better route guidance as normally installed on a roadway without construction.
2. When permanent regulatory or warning signs conflict with work zone conditions, remove or cover the permanent signs until the permanent sign message matches the roadway condition.
3. When existing permanent signs are moved and relocated due to construction purposes, they shall be visible to motorists at all times.
4. If existing signs are to be relocated on their original supports, they shall be installed on crashworthy bases as shown on the SMD Standard sheets. The signs shall meet the required mounting heights shown on the BC Sheets or the SMD Standards. This work should be paid for under the appropriate pay item for relocating existing signs.
5. If permanent signs are to be removed and relocated using temporary supports, the Contractor shall use crashworthy supports as shown on the BC sheets or the CWZTCD. The signs shall meet the required mounting heights shown on the BC Sheets or the SMD Standards during construction. This work should be paid for under the appropriate pay item for relocating existing signs.
6. Any sign or traffic control device that is struck or damaged by the Contractor or his/her construction equipment shall be replaced as soon as possible by the Contractor to ensure proper guidance for the motorists. This will be subsidiary to Item 502.

GENERAL NOTES FOR WORK ZONE SIGNS

1. Contractor shall install and maintain signs in a straight and plumb condition and/or as directed by the Engineer.
2. Wooden sign posts shall be painted white.
3. Barricades shall NOT be used as sign supports.
4. All signs shall be installed in accordance with the plans or as directed by the Engineer. Signs shall be used to regulate, warn, and guide the traveling public safely through the work zone.
5. The Contractor may furnish either the sign design shown in the plans or in the "Standard Highway Sign Designs for Texas" (SHSD). The Engineer/Inspector may require the Contractor to furnish other work zone signs that are shown in the TMUTCD but may have been omitted from the plans. Any variation in the plans shall be documented by written agreement between the Engineer and the Contractor's Responsible Person. All changes must be documented in writing before being implemented. This can include documenting the changes in the Inspector's TxDOT diary and having both the Inspector and Contractor initial and date the agreed upon changes.
6. The Contractor shall furnish sign supports listed in the "Compliant Work Zone Traffic Control Device List" (CWZTCD). The Contractor shall install the sign support in accordance with the manufacturer's recommendations. If there is a question regarding installation procedures, the Contractor shall furnish the Engineer a copy of the manufacturer's installation recommendations so the Engineer can verify the correct procedures are being followed.
7. The Contractor is responsible for installing signs on approved supports and replacing signs with damaged or cracked substrates and/or damaged or marred reflective sheeting as directed by the Engineer/Inspector.
8. Identification markings may be shown only on the back of the sign substrate. The maximum height of letters and/or company logos used for identification shall be 1 inch.
9. The Contractor shall replace damaged wood posts. New or damaged wood sign posts shall not be spliced.

DURATION OF WORK (as defined by the "Texas Manual on Uniform Traffic Control Devices" Part 6)

1. The types of sign supports, sign mounting height, the size of signs, and the type of sign substrates can vary based on the type of work being performed. The Engineer is responsible for selecting the appropriate size sign for the type of work being performed. The Contractor is responsible for ensuring the sign support, sign mounting height and substrate meets manufacturer's recommendations in regard to crashworthiness and duration of work requirements.
   a. Long-term stationary - work that occupies a location more than 3 days.
   b. Intermediate-term stationary - work that occupies a location more than one daylight period up to 3 days, or nighttime work lasting more than one hour.
   c. Short-term stationary - daytime work that occupies a location for more than 1 hour in a single daylight period.
   d. Short, duration - work that occupies a location up to 1 hour.
   e. Mobile - work that moves continuously or intermittently (stopping for up to approximately 15 minutes.)

SIGN MOUNTING HEIGHT

1. The bottom of Long-term/Intermediate-term signs shall be at least 7 feet, but not more than 9 feet, above the paved surface, except as shown for supplemental plaques mounted below other signs.
2. The bottom of Short-term/Short Duration signs shall be a minimum of 1 foot above the pavement surface but no more than 2 feet above the ground.
3. Long-term/Intermediate-term Signs may be used in lieu of Short-term/Short Duration signing.
4. Short-term/Short Duration signs shall be used only during daylight and shall be removed at the end of the workday or raised to appropriate Long-term/Intermediate sign height.
5. Regulatory signs shall be mounted at least 7 feet, but not more than 9 feet, above the paved surface regardless of work duration.

SIZE OF SIGNS

1. The Contractor shall furnish the sign sizes shown on BC (2) unless otherwise shown in the plans or as directed by the Engineer.

SIGN SUBSTRATES

1. The Contractor shall ensure the sign substrate is installed in accordance with the manufacturer's recommendations for the type of sign support that is being used. The CWZTCD lists each substrate that can be used on the different types and models of sign supports.
2. "Mesh" type materials are NOT an approved sign substrate, regardless of the tightness of the weave.
3. All wooden individual sign panels fabricated from 2 or more pieces shall have one or more plywood cleat, 1/2" thick by 6" wide, fastened to the back of the sign and extending fully across the sign. The cleat shall be attached to the back of the sign using wood screws that do not penetrate the face of the sign panel. The screws shall be placed on both sides of the splice and spaced at 6" centers. The Engineer may approve other methods of splicing the sign face.

REFLECTIVE SHEETING

1. All signs shall be retroreflective and constructed of sheeting meeting the color and retro-reflectivity requirements of DMS-8300 for rigid signs or DMS-8310 for roll-up signs. The web address for DMS specifications is shown on BC(1).
2. White sheeting, meeting the requirements of DMS-8300 Type A, shall be used for signs with a white background.
3. Orange sheeting, meeting the requirements of DMS-8300 Type B_{FL} or Type C_{FL}, shall be used for rigid signs with orange backgrounds.

SIGN LETTERS

1. All sign letters and numbers shall be clear, and open rounded type uppercase alphabet letters as approved by the Federal Highway Administration (FHWA) and as published in the "Standard Highway Sign Design for Texas" manual. Signs, letters and numbers shall be of first class workmanship in accordance with Department Standards and Specifications.

REMOVING OR COVERING

1. When sign messages may be confusing or do not apply, the signs shall be removed or completely covered.
2. Long-term stationary or intermediate stationary signs installed on square metal tubing may be turned away from traffic 90 degrees when the sign message is not applicable. This technique may not be used for signs installed in the median of divided highways or near any intersections where the sign may be seen from approaching traffic.
3. Signs installed on wooden skids shall not be turned at 90 degree angles to the roadway. These signs should be removed or completely covered when not required.
4. When signs are covered, the material used shall be opaque, such as heavy mil black plastic, or other materials which will cover the entire sign face and maintain their opaque properties under automobile headlights at night, without damaging the sign sheeting.
5. Burlap shall NOT be used to cover signs.
6. Duct tape or other adhesive material shall NOT be affixed to a sign face.
7. Signs and anchor stubs shall be removed and holes backfilled upon completion of work.

SIGN SUPPORT WEIGHTS

1. Where sign supports require the use of weights to keep from turning over, the use of sandbags with dry, cohesionless sand should be used.
2. The sandbags will be tied shut to keep the sand from spilling and to maintain a constant weight.
3. Rock, concrete, iron, steel or other solid objects shall not be permitted for use as sign support weights.
4. Sandbags should weigh a minimum of 35 lbs and a maximum of 50 lbs.
5. Sandbags shall be made of a durable material that tears upon vehicular impact. Rubber (such as tire inner tubes) shall NOT be used.
6. Rubber ballasts designed for channelizing devices should not be used for ballast on portable sign supports. Sign supports designed and manufactured with rubber bases may be used when shown on the CWZTCD list.
7. Sandbags shall only be placed along or laid over the base supports of the traffic control device and shall not be suspended above ground level or hung with rope, wire, chains or other fasteners. Sandbags shall be placed along the length of the skids to weigh down the sign support.
8. Sandbags shall NOT be placed under the skid and shall not be used to level sign supports placed on slopes.

FLAGS ON SIGNS

1. Flags may be used to draw attention to warning signs. When used the flag shall be 16 inches square or larger and shall be orange or fluorescent red-orange in color. Flags shall not be allowed to cover any portion of the sign face.

Texas Department of Transportation — Traffic Operations Division Standard

BARRICADE AND CONSTRUCTION TEMPORARY SIGN NOTES

BC(4)-14

FILE: bc-14.dgn	DN: TxDOT	CK: TxDOT	DW: TxDOT	CK: TxDOT
© TxDOT November 2002	MAINTENANCE PROJECT NO.		HIGHWAY	
REVISIONS 9-07 8-14 7-13	RMC 6294-03-001		IH 10, ETC	
	DIST	COUNTY		SHEET NO.
	ELP	EL PASO		10

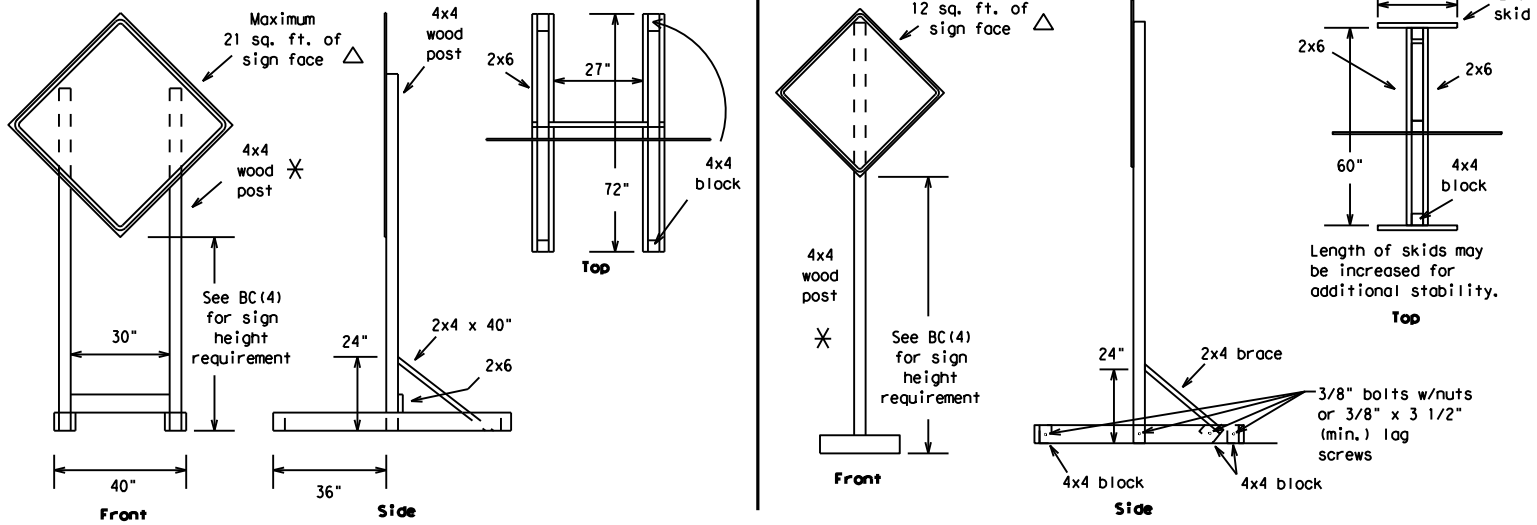

SKID MOUNTED WOOD SIGN SUPPORTS

LONG/INTERMEDIATE TERM STATIONARY - PORTABLE SKID MOUNTED SIGN SUPPORTS □

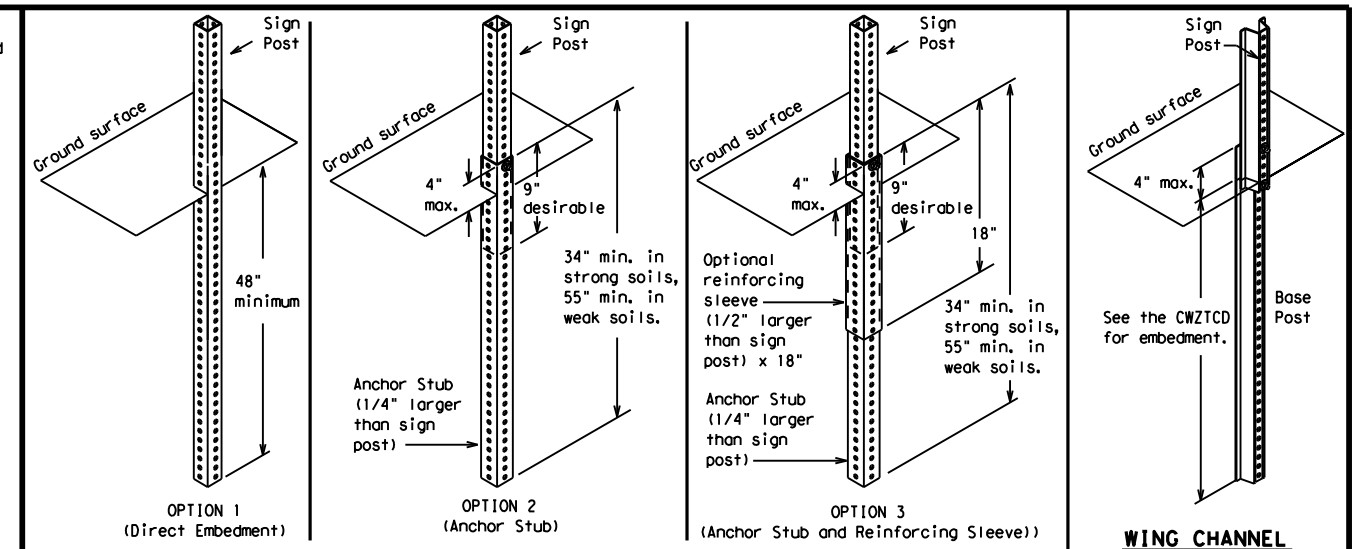

PERFORATED SQUARE METAL TUBING

WING CHANNEL
Lap-splice/base bolted anchor

GROUND MOUNTED SIGN SUPPORTS

Refer to the CWZTCD and the manufacturer's installation procedure for each type sign support.
The maximum sign square footage shall adhere to the manufacturer's recommendation.
Two post installations can be used for larger signs.

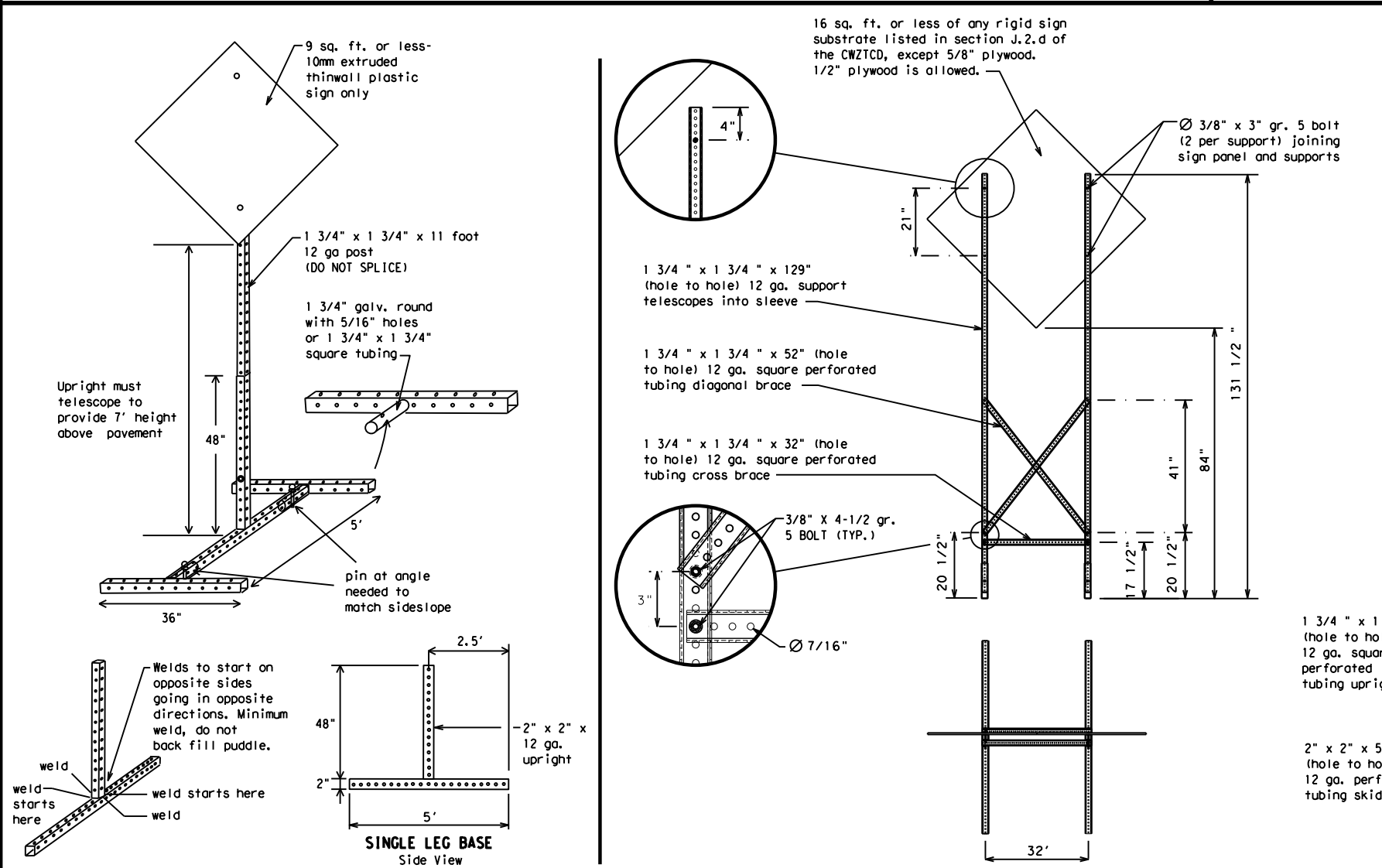

SKID MOUNTED PERFORATED SQUARE STEEL TUBING SIGN SUPPORTS

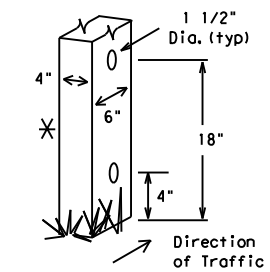

Nominal Post Size	Number of Posts	Maximum Sq. feet of Sign Face	Minimum Soil Embedment	Drilled Hole(s) Required
4 x 4	1	12	36"	NO
4 x 4	2	21	36"	NO
4 x 6	1	21	36"	YES
4 x 6	2	36	36"	YES

WOOD POST SYSTEM FOR GROUND MOUNTED SIGN SUPPORTS

WEDGE ANCHORS

Both steel and plastic Wedge Anchor Systems as shown on the SMD Standard Sheets may be used as temporary sign supports for signs up to 10 square feet of sign face. They may be set in concrete or in sturdy soils if approved by the Engineer. (See web address for "Traffic Engineering Standard Sheets" on BC(1)).

OTHER DESIGNS

MORE DETAILS OF APPROVED LONG/INTERMEDIATE AND SHORT TERM SUPPORTS CAN BE FOUND ON THE CWZTCD LIST. SEE BC(1) FOR WEBSITE LOCATION.

GENERAL NOTES

1. Nails may be used in the assembly of wooden sign supports, but 3/8" bolts with nuts or 3/8" x 3 1/2" lag screws must be used on every joint for final connection.
2. No more than 2 sign posts shall be placed within a 7 ft. circle, except for specific materials noted on the CWZTCD List.
3. When project is completed, all sign supports and foundations shall be removed from the project site. This will be considered subsidiary to Item 502.

□ See BC(4) for definition of "Work Duration."

✳ Wood sign posts MUST be one piece. Splicing will NOT be allowed. Posts shall be painted white.

△ See the CWZTCD for the type of sign substrate that can be used for each approved sign support.

SHEET 5 OF 12

Texas Department of Transportation — Traffic Operations Division Standard

BARRICADE AND CONSTRUCTION TYPICAL SIGN SUPPORT

BC(5)-14

FILE: bc-14.dgn	DN: TxDOT	CK: TxDOT	DW: TxDOT	CK: TxDOT
© TxDOT November 2002	MAINTENANCE PROJECT NO.		HIGHWAY	
REVISIONS	RMC 6294-03-001		IH 10, ETC	
9-07 8-14	DIST	COUNTY		SHEET NO.
7-13	ELP	EL PASO		11

DISCLAIMER:
The use of this standard is governed by the "Texas Engineering Practice Act". No warranty of any kind is made by TxDOT for any purpose whatsoever. TxDOT assumes no responsibility for the conversion of this standard to other formats or for incorrect results or damages resulting from its use.

DATE: 8/26/2005 1:00:14 PM
FILE: bc5cdetail.dgn Microstation Projects\6294-03-001_Mowing_ELP_W_FY15\Design Files\bc-14_5thru16.dgn

WHEN NOT IN USE, REMOVE THE PCMS FROM THE RIGHT-OF-WAY OR PLACE THE PCMS BEHIND BARRIER OR GUARDRAIL WITH SIGN PANEL TURNED PARALLEL TO TRAFFIC

PORTABLE CHANGEABLE MESSAGE SIGNS

1. The Engineer/Inspector shall approve all messages used on portable changeable message signs (PCMS).
2. Messages on PCMS should contain no more than 8 words (about four to eight characters per word), not including simple words such as "TO," "FOR," "AT," etc.
3. Messages should consist of a single phase, or two phases that alternate. Three-phase messages are not allowed. Each phase of the message should convey a single thought, and must be understood by itself.
4. Use the word "EXIT" to refer to an exit ramp on a freeway; i.e., "EXIT CLOSED." Do not use the term "RAMP."
5. Always use the route or interstate designation (IH, US, SH, FM) along with the number when referring to a roadway.
6. When in use the bottom of a stationary PCMS message panel should be a minimum 7 feet above the roadway, where possible.
7. The message term "WEEKEND" should be used only if the work is to start on Saturday morning and end by Sunday evening at midnight. Actual days and hours of work should be displayed on the PCMS if work is to begin on Friday evening and/or continue into Monday morning.
8. The Engineer/Inspector may select one of two options which are available for displaying a two-phase message on a PCMS. Each phase may be displayed for either four seconds each or for three seconds each.
9. Do not "flash" messages or words included in a message. The message should be steady burn or continuous while displayed.
10. Do not present redundant information on a two-phase message; i.e., keeping two lines of the message the same and changing the third line.
11. Do not use the word "Danger" in message.
12. Do not display the message "LANES SHIFT LEFT" or "LANES SHIFT RIGHT" on a PCMS. Drivers do not understand the message.
13. Do not display messages that scroll horizontally or vertically across the face of the sign.
14. The following table lists abbreviated words and two-word phrases that are acceptable for use on a PCMS. Both words in a phrase must be displayed together. Words or phrases not on this list should not be abbreviated, unless shown in the TMUTCD.
15. PCMS character height should be at least 18 inches for trailer mounted units. They should be visible from at least 1/2 (.5) mile and the text should be legible from at least 600 feet at night and 800 feet in daylight. Truck mounted units must have a character height of 10 inches and must be legible from at least 400 feet.
16. Each line of text should be centered on the message board rather than left or right justified.
17. If disabled, the PCMS should default to an illegible display that will not alarm motorists and will only be used to alert workers that the PCMS has malfunctioned. A pattern such as a series of horizontal solid bars is appropriate.

WORD OR PHRASE	ABBREVIATION
Access Road	ACCS RD
Alternate	ALT
Avenue	AVE
Best Route	BEST RTE
Boulevard	BLVD
Bridge	BRDG
Cannot	CANT
Center	CTR
Construction Ahead	CONST AHD
CROSSING	XING
Detour Route	DETOUR RTE
Do Not	DONT
East	E
Eastbound	(route) E
Emergency	EMER
Emergency Vehicle	EMER VEH
Entrance, Enter	ENT
Express Lane	EXP LN
Expressway	EXPWY
XXXX Feet	XXXX FT
Fog Ahead	FOG AHD
Freeway	FRWY, FWY
Freeway Blocked	FWY BLKD
Friday	FRI
Hazardous Driving	HAZ DRIVING
Hazardous Material	HAZMAT
High-Occupancy	HOV
Vehicle Highway	HWY
Hour(s)	HR, HRS
Information	INFO
It Is	ITS
Junction	JCT
Left	LFT
Left Lane	LFT LN
Lane Closed	LN CLOSED
Lower Level	LWR LEVEL
Maintenance	MAINT

WORD OR PHRASE	ABBREVIATION
Major	MAJ
Miles	MI
Miles Per Hour	MPH
Minor	MNR
Monday	MON
Normal	NORM
North	N
Northbound	(route) N
Parking	PKING
Road	RD
Right Lane	RT LN
Saturday	SAT
Service Road	SERV RD
Shoulder	SHLDR
Slippery	SLIP
South	S
Southbound	(route) S
Speed	SPD
Street	ST
Sunday	SUN
Telephone	PHONE
Temporary	TEMP
Thursday	THURS
To Downtown	TO DWNTN
Traffic	TRAF
Travelers	TRVLRS
Tuesday	TUES
Time Minutes	TIME MIN
Upper Level	UPR LEVEL
Vehicles (s)	VEH, VEHS
Warning	WARN
Wednesday	WED
Weight Limit	WT LIMIT
West	W
Westbound	(route) W
Wet Pavement	WET PVMT
Will Not	WONT

Roadway designation # IH-number, US-number, SH-number, FM-number

RECOMMENDED PHASES AND FORMATS FOR PCMS MESSAGES DURING ROADWORK ACTIVITIES

(The Engineer may approve other messages not specifically covered here.)

Phase 1: Condition Lists

Road/Lane/Ramp Closure List

FREEWAY CLOSED X MILE	FRONTAGE ROAD CLOSED
ROAD CLOSED AT SH XXX	SHOULDER CLOSED XXX FT
ROAD CLSD AT FM XXXX	RIGHT LN CLOSED XXX FT
RIGHT X LANES CLOSED	RIGHT X LANES OPEN
CENTER LANE CLOSED	DAYTIME LANE CLOSURES
NIGHT LANE CLOSURES	I-XX SOUTH EXIT CLOSED
VARIOUS LANES CLOSED	EXIT XXX CLOSED X MILE
EXIT CLOSED	RIGHT LN TO BE CLOSED
MALL DRIVEWAY CLOSED	X LANES CLOSED TUE - FRI
XXXXXXXX BLVD CLOSED	

Other Condition List

ROADWORK XXX FT	ROAD REPAIRS XXXX FT
FLAGGER XXXX FT	LANE NARROWS XXXX FT
RIGHT LN NARROWS XXXX FT	TWO-WAY TRAFFIC XX MILE
MERGING TRAFFIC XXXX FT	CONST TRAFFIC XXX FT
LOOSE GRAVEL XXXX FT	UNEVEN LANES XXXX FT
DETOUR X MILE	ROUGH ROAD XXXX FT
ROADWORK PAST SH XXXX	ROADWORK NEXT FRI-SUN
BUMP XXXX FT	US XXX EXIT X MILES
TRAFFIC SIGNAL XXXX FT	LANES SHIFT *

* LANES SHIFT in Phase 1 must be used with STAY IN LANE in Phase 2.

Phase 2: Possible Component Lists

Action to Take/Effect on Travel List

MERGE RIGHT	FORM X LINES RIGHT
DETOUR NEXT X EXITS	USE XXXXX RD EXIT
USE EXIT XXX	USE EXIT I-XX NORTH
STAY ON US XXX SOUTH	USE I-XX E TO I-XX N
TRUCKS USE US XXX N	WATCH FOR TRUCKS
WATCH FOR TRUCKS	EXPECT DELAYS
EXPECT DELAYS	PREPARE TO STOP
REDUCE SPEED XXX FT	END SHOULDER USE
USE OTHER ROUTES	WATCH FOR WORKERS
STAY IN LANE *	

Location List

AT FM XXXX
BEFORE RAILROAD CROSSING
NEXT X MILES
PAST US XXX EXIT
XXXXXXX TO XXXXXXX
US XXX TO FM XXXX

Warning List

SPEED LIMIT XX MPH
MAXIMUM SPEED XX MPH
MINIMUM SPEED XX MPH
ADVISORY SPEED XX MPH
RIGHT LANE EXIT
USE CAUTION
DRIVE SAFELY
DRIVE WITH CARE

** Advance Notice List

TUE-FRI XX AM- X PM
APR XX- XX X PM-X AM
BEGINS MONDAY
BEGINS MAY XX
MAY X-X XX PM - XX AM
NEXT FRI-SUN
XX AM TO XX PM
NEXT TUE AUG XX
TONIGHT XX PM- XX AM

** See Application Guidelines Note 6.

APPLICATION GUIDELINES

1. Only 1 or 2 phases are to be used on a PCMS.
2. The 1st phase (or both) should be selected from the "Road/Lane/Ramp Closure List" and the "Other Condition List".
3. A 2nd phase can be selected from the "Action to Take/Effect on Travel, Location, General Warning, or Advance Notice Phase Lists".
4. A Location Phase is necessary only if a distance or location is not included in the first phase selected.
5. If two PCMS are used in sequence, they must be separated by a minimum of 1000 ft. Each PCMS shall be limited to two phases, and should be understandable by themselves.
6. For advance notice, when the current date is within seven days of the actual work date, calendar days should be replaced with days of the week. Advance notification should typically be for no more than one week prior to the work.

WORDING ALTERNATIVES

1. The words RIGHT, LEFT and ALL can be interchanged as appropriate.
2. Roadway designations IH, US, SH, FM and LP can be interchanged as appropriate.
3. EAST, WEST, NORTH and SOUTH (or abbreviations E, W, N and S) can be interchanged as appropriate.
4. Highway names and numbers replaced as appropriate.
5. ROAD, HIGHWAY and FREEWAY can be interchanged as needed.
6. AHEAD may be used instead of distances if necessary.
7. FT and MI, MILE and MILES interchanged as appropriate.
8. AT, BEFORE and PAST interchanged as needed.
9. Distances or AHEAD can be eliminated from the message if a location phase is used.

PCMS SIGNS WITHIN THE R.O.W. SHALL BE BEHIND GUARDRAIL OR CONCRETE BARRIER OR SHALL HAVE A MINIMUM OF FOUR (4) PLASTIC DRUMS PLACED PERPENDICULAR TO TRAFFIC ON THE UPSTREAM SIDE OF THE PCMS, WHEN EXPOSED TO ONE DIRECTION OF TRAFFIC. WHEN EXPOSED TO TWO WAY TRAFFIC, THE FOUR DRUMS SHOULD BE PLACED WITH ONE DRUM AT EACH OF THE FOUR CORNERS OF THE UNIT.

FULL MATRIX PCMS SIGNS

1. When Full Matrix PCMS signs are used, the character height and legibility/visibility requirements shall be maintained as listed in Note 15 under "PORTABLE CHANGEABLE MESSAGE SIGNS" above.
2. When symbol signs, such as the "Flagger Symbol"(CW20-7) are represented graphically on the Full Matrix PCMS sign and, with the approval of the Engineer, it shall maintain the legibility/visibility requirement listed above.
3. When symbol signs are represented graphically on the Full Matrix PCMS, they shall only supplement the use of the static sign represented, and shall not substitute for, or replace that sign.
4. A full matrix PCMS may be used to simulate a flashing arrow board provided it meets the visibility, flash rate and dimming requirements on BC(7), for the same size arrow.

Texas Department of Transportation — Traffic Operations Division Standard

BARRICADE AND CONSTRUCTION PORTABLE CHANGEABLE MESSAGE SIGN (PCMS)

BC(6)-14

FILE: bc-14.dgn	DN: TxDOT	CK: TxDOT	DW: TxDOT	CK: TxDOT
© TxDOT November 2002	MAINTENANCE PROJECT NO.		HIGHWAY	
REVISIONS	RMC 6294-03-001		IH 10, ETC	
9-07 8-14	DIST	COUNTY		SHEET NO.
7-13	ELP	EL PASO		12

100

DISCLAIMER:
The use of this standard is governed by the "Texas Engineering Practice Act". No warranty of any kind is made by TxDOT for any purpose whatsoever. TxDOT assumes no responsibility for the conversion of this standard to other formats or for incorrect results or damages resulting from its use.

DATE: BA25/20W5 1:00:58 PM
FILE: DOCGAMENAME Microstation Projects\6294-03-001_Mowing_ELP_W_FY15\Design Files\bc-14_5thru16.dgn

1. Barrier Reflectors shall be pre-qualified, and conform to the color and reflectivity requirements of DMS-8600. A list of prequalified Barrier Reflectors can be found at the Material Producer List web address shown on BC(1).
2. Color of Barrier Reflectors shall be as specified in the TMUTCD. The cost of the reflectors shall be considered subsidiary to Item 512.

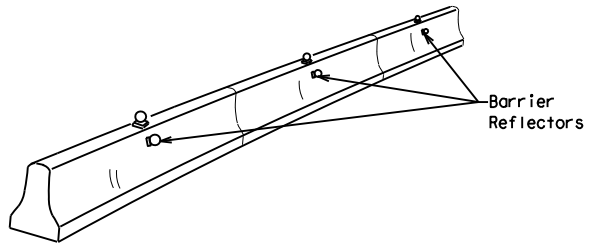

CONCRETE TRAFFIC BARRIER (CTB)

3. Where traffic is on one side of the CTB, two (2) Barrier Reflectors shall be mounted in approximately the midsection of each section of CTB. An alternate mounting location is uniformly spaced at one end of each CTB. This will allow for attachment of a barrier grapple without damaging the reflector. The Barrier Reflector mounted on the side of the CTB shall be located directly below the reflector mounted on top of the barrier, as shown in the detail above.
4. Where CTB separates two-way traffic, three barrier reflectors shall be mounted on each section of CTB. The reflector unit on top shall have two yellow reflective faces (Bi-Directional)while the reflectors on each side of the barrier shall have one yellow reflective face, as shown in the detail above.
5. When CTB separates traffic traveling in the same direction, no barrier reflectors will be required on top of the CTB.
6. Barrier Reflector units shall be yellow or white in color to match the edgeline being supplemented.
7. Maximum spacing of Barrier Reflectors is forty (40) feet.
8. Pavement markers or temporary flexible-reflective roadway marker tabs shall NOT be used as CTB delineation.
9. Attachment of Barrier Reflectors to CTB shall be per manufacturer's recommendations.
10. Missing or damaged Barrier Reflectors shall be replaced as directed by the Engineer.
11. Single slope barriers shall be delineated as shown on the above detail.

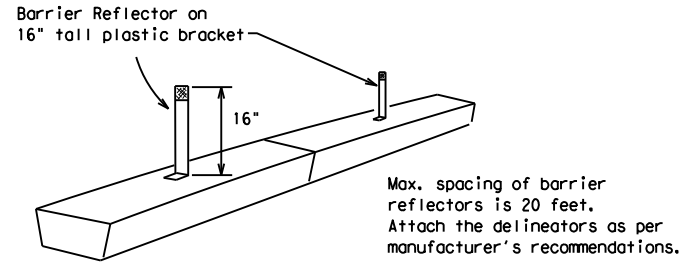

LOW PROFILE CONCRETE BARRIER (LPCB)

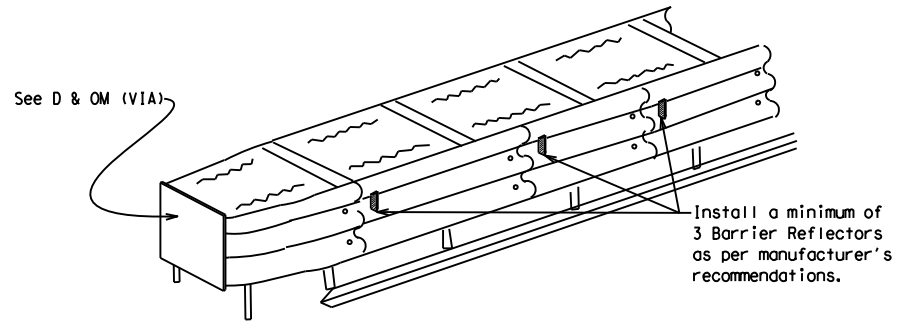

DELINEATION OF END TREATMENTS

END TREATMENTS FOR CTB'S USED IN WORK ZONES

End treatments used on CTB's in work zones shall meet crashworthy standards as defined in the National Cooperative Highway Research Report 350. Refer to the CWZTCD List for approved end treatments and manufacturers.

BARRIER REFLECTORS FOR CONCRETE TRAFFIC BARRIER AND ATTENUATORS

Arrow Boards may be located behind channelizing devices in place for a shoulder taper or merging taper, otherwise they shall be delineated with four (4) channelizing devices placed perpendicular to traffic on the upstream side of traffic.

1. The Flashing Arrow Board should be used for all lane closures on multi-lane roadways, or slow moving maintenance or construction activities on the travel lanes.
2. Flashing Arrow Boards should not be used on two-lane, two-way roadways, detours, diversions or work on shoulders unless the "CAUTION" display (see detail below) is used.
3. The Engineer/Inspector shall choose all appropriate signs, barricades and/or other traffic control devices that should be used in conjunction with the Flashing Arrow Board.
4. The Flashing Arrow Board should be able to display the following symbols:

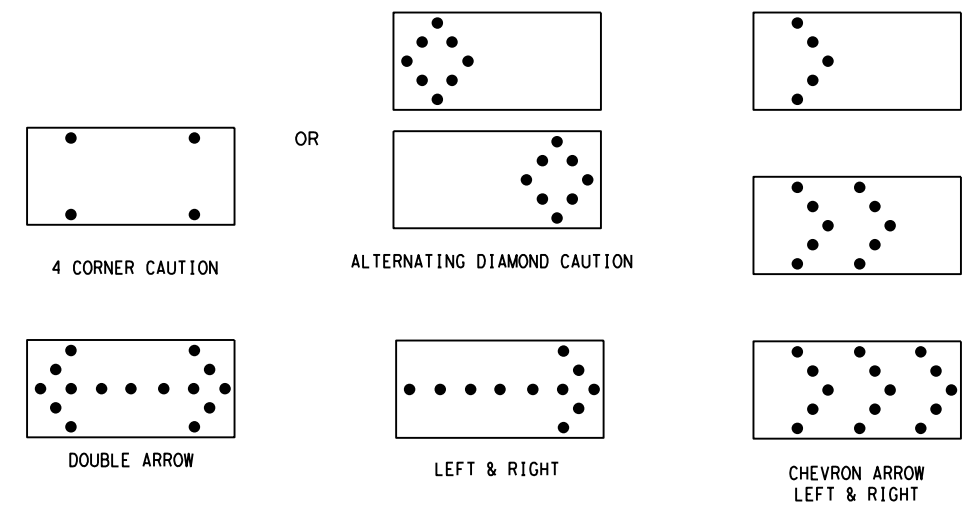

5. The "CAUTION" display consists of four corner lamps flashing simultaneously, or the Alternating Diamond Caution mode as shown.
6. The straight line caution display is NOT ALLOWED.
7. The Flashing Arrow Board shall be capable of minimum 50 percent dimming from rated lamp voltage. The flashing rate of the lamps shall not be less than 25 nor more than 40 flashes per minute.
8. Minimum lamp "on time" shall be approximately 50 percent for the flashing arrow and equal intervals of 25 percent for each sequential phase of the flashing chevron.
9. The sequential arrow display is NOT ALLOWED.
10. The flashing arrow display is the TxDOT standard; however, the sequential Chevron display may be used during daylight operations.
11. The Flashing Arrow Board shall be mounted on a vehicle, trailer or other suitable support.
12. A Flashing Arrow Board SHALL NOT BE USED to laterally shift traffic.
13. A full matrix PCMS may be used to simulate a Flashing Arrow Board provided it meets visibility, flash rate and dimming requirements on this sheet for the same size arrow.
14. Minimum mounting height of trailer mounted Arrow Boards should be 7 feet from roadway to bottom of panel.

REQUIREMENTS

TYPE	MINIMUM SIZE	MINIMUM NUMBER OF PANEL LAMPS	MINIMUM VISIBILITY DISTANCE
B	30 x 60	13	3/4 mile
C	48 x 96	15	1 mile

ATTENTION

Flashing Arrow Boards shall be equipped with automatic dimming devices.

WHEN NOT IN USE, REMOVE THE ARROW BOARD FROM THE RIGHT-OF-WAY OR PLACE THE ARROW BOARD BEHIND CONCRETE TRAFFIC BARRIER OR GUARDRAIL.

FLASHING ARROW BOARDS

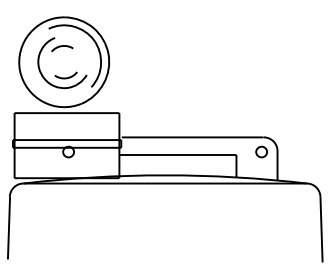

Type C Warning Light or approved substitute mounted on a drum adjacent to the travel way.

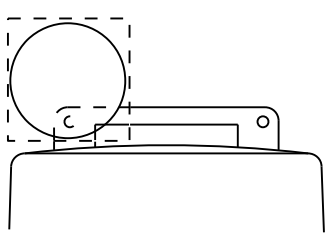

Warning reflector may be round or square. Must have a yellow reflective surface area of at least 30 square inches

WARNING LIGHTS

1. Warning lights shall meet the requirements of the TMUTCD.
2. Warning lights shall NOT be installed on barricades.
3. Type A-Low Intensity Flashing Warning Lights are commonly used with drums. They are intended to warn of or mark a potentially hazardous area. Their use shall be as indicated on this sheet and/or other sheets of the plans by the designation "FL". The Type A Warning Lights shall not be used with signs manufactured with Type B_{FL} or C_{FL} Sheeting meeting the requirements of Departmental Material Specification DMS-8300.
4. Type-C and Type D 360 degree Steady Burn Lights are intended to be used in a series for delineation to supplement other traffic control devices. Their use shall be as indicated on this sheet and/or other sheets of the plans by the designation "SB".
5. The Engineer/Inspector or the plans shall specify the location and type of warning lights to be installed on the traffic control devices.
6. When required by the Engineer, the Contractor shall furnish a copy of the warning lights certification. The warning light manufacturer will certify the warning lights meet the requirements of the latest ITE Purchase Specifications for Flashing and Steady-Burn Warning Lights.
7. When used to delineate curves, Type-C and Type D Steady Burn Lights should only be placed on the outside of the curve, not the inside.
8. The location of warning lights and warning reflectors on drums shall be as shown elsewhere in the plans.

WARNING LIGHTS MOUNTED ON PLASTIC DRUMS

1. Type A flashing warning lights are intended to warn drivers that they are approaching or are in a potentially hazardous area.
2. Type A random flashing warning lights are not intended for delineation and shall not be used in a series.
3. A series of sequential flashing warning lights placed on channelizing devices to form a merging taper may be used for delineation. If used, the successive flashing of the sequential warning lights should occur from the beginning of the taper to the end of the merging taper in order to identify the desired vehicle path. The rate of flashing for each light shall be 65 flashes per minute, plus or minus 10 flashes.
4. Type C and D steady-burn warning lights are intended to be used in a series to delineate the edge of the travel lane on detours, on lane changes, on lane closures, and on other similar conditions.
5. Type A, Type C and Type D warning lights shall be installed at locations as detailed on other sheets in the plans.
6. Warning lights shall not be installed on a drum that has a sign, chevron or vertical panel.
7. The maximum spacing for warning lights on drums should be identical to the channelizing device spacing.

WARNING REFLECTORS MOUNTED ON PLASTIC DRUMS AS A SUBSTITUTE FOR TYPE C (STEADY BURN) WARNING LIGHTS

1. A warning reflector or approved substitute may be mounted on a plastic drum as a substitute for a Type C, steady burn warning light at the discretion of the Contractor unless otherwise noted in the plans.
2. The warning reflector shall be yellow in color and shall be manufactured using a sign substrate approved for use with plastic drums listed on the CWZTCD.
3. The warning reflector shall have a minimum retroreflective surface area (one-side) of 30 square inches.
4. Round reflectors shall be fully reflectorized, including the area where attached to the drum.
5. Square substrates must have a minimum of 30 square inches of reflectorized sheeting. They do not have to be reflectorized where it attaches to the drum.
6. The side of the warning reflector facing approaching traffic shall have sheeting meeting the color and retroreflectivity requirements for DMS 8300-Type B or Type C.
7. When used near two-way traffic, both sides of the warning reflector shall be reflectorized.
8. The warning reflector should be mounted on the side of the handle nearest approaching traffic.
9. The maximum spacing for warning reflectors should be identical to the channelizing device spacing requirements.

TRUCK-MOUNTED ATTENUATORS

1. Truck-mounted attenuators (TMA) used on TxDOT facilities must meet the requirements outlined in the National Cooperative Highway Research Report No. 350 (NCHRP 350) or the Manual for Assessing Safety Hardware (MASH).
2. Refer to the CWZTCD for the requirements of Level 2 or Level 3 TMAs.
3. Refer to the CWZTCD for a list of approved TMAs.
4. TMAs are required on freeways unless otherwise noted in the plans.
5. A TMA should be used anytime that it can be positioned 30 to 100 feet in advance of the area of crew exposure without adversely affecting the work performance.
6. The only reason a TMA should not be required is when a work area is spread down the roadway and the work crew is an extended distance from the TMA.

SHEET 7 OF 12

Texas Department of Transportation — Traffic Operations Division Standard

BARRICADE AND CONSTRUCTION ARROW PANEL, REFLECTORS, WARNING LIGHTS & ATTENUATOR

BC(7)-14

FILE: bc-14.dgn	DN: TxDOT	CK: TxDOT	DW: TxDOT	CK: TxDOT
© TxDOT November 2002	MAINTENANCE PROJECT NO.		HIGHWAY	
REVISIONS 9-07 8-14 7-13	RMC 6294-03-001		IH 10, ETC	
	DIST	COUNTY		SHEET NO.
	ELP	EL PASO		13

DISCLAIMER:
The use of this standard is governed by the "Texas Engineering Practice Act". No warranty of any kind is made by TxDOT for any purpose whatsoever. TxDOT assumes no responsibility for the conversion of this standard to other formats or for incorrect results or damages resulting from its use.

DATE: BAR6/20WS 1:01:38 PM
FILE: DOCGUMENTNAME microstation Projects\6294-03-001_Mowing_ELP_W_FY15\Design Files\bc-14_5thru16.dgn

DISCLAIMER:
The use of this standard is governed by the "Texas Engineering Practice Act". No warranty of any kind is made by TxDOT for any purpose whatsoever. TxDOT assumes no responsibility for the conversion of this standard to other formats or for incorrect results or damages resulting from its use.

DATE: 8/25/2005 1:02:27 PM
FILE: DOCUMENTINAME Microstation Projects\6294-03-001_Mowing_ELP_W_FY15\Design Files\bc-14_5thru16.dgn

GENERAL NOTES

1. For long term stationary work zones on freeways, drums shall be used as the primary channelizing device.
2. For intermediate term stationary work zones on freeways, drums should be used as the primary channelizing device but may be replaced in tangent sections by vertical panels, or 42" two-piece cones. In tangent sections one-piece cones may be used with the approval of the Engineer but only if personnel are present on the project at all times to maintain the cones in proper position and location.
3. For short term stationary work zones on freeways, drums are the preferred channelizing device but may be replaced in tapers, transitions and tangent sections by vertical panels, two-piece cones or one-piece cones as approved by the Engineer.
4. Drums and all related items shall comply with the requirements of the current version of the "Texas Manual on Uniform Traffic Control Devices" (TMUTCD) and the "Compliant Work Zone Traffic Control Devices List" (CWZTCD).
5. Drums, bases, and related materials shall exhibit good workmanship and shall be free from objectionable marks or defects that would adversely affect their appearance or serviceability.
6. The Contractor shall have a maximum of 24 hours to replace any plastic drums identified for replacement by the Engineer/Inspector. The replacement device must be an approved device.

GENERAL DESIGN REQUIREMENTS

Pre-qualified plastic drums shall meet the following requirements:

1. Plastic drums shall be a two-piece design; the "body" of the drum shall be the top portion and the "base" shall be the bottom.
2. The body and base shall lock together in such a manner that the body separates from the base when impacted by a vehicle traveling at a speed of 20 MPH or greater but prevents accidental separation due to normal handling and/or air turbulence created by passing vehicles.
3. Plastic drums shall be constructed of lightweight flexible, and deformable materials. The Contractor shall NOT use metal drums or single piece plastic drums as channelization devices or sign supports.
4. Drums shall present a profile that is a minimum of 18 inches in width at the 36 inch height when viewed from any direction. The height of drum unit (body installed on base) shall be a minimum of 36 inches and a maximum of 42 inches.
5. The top of the drum shall have a built-in handle for easy pickup and shall be designed to drain water and not collect debris. The handle shall have a minimum of two widely spaced 9/16 inch diameter holes to allow attachment of a warning light, warning reflector unit or approved compliant sign.
6. The exterior of the drum body shall have a minimum of four alternating orange and white retroreflective circumferential stripes not less than 4 inches nor greater than 8 inches in width. Any non-reflectorized space between any two adjacent stripes shall not exceed 2 inches in width.
7. Bases shall have a maximum width of 36 inches, a maximum height of 4 inches, and a minimum of two footholds of sufficient size to allow base to be held down while separating the drum body from the base.
8. Plastic drums shall be constructed of ultra-violet stabilized, orange, high-density polyethylene (HDPE) or other approved material.
9. Drum body shall have a maximum unballasted weight of 11 lbs.
10. Drum and base shall be marked with manufacturer's name and model number.

RETROREFLECTIVE SHEETING

1. The stripes used on drums shall be constructed of sheeting meeting the color and retroreflectivity requirements of Departmental Materials Specification DMS-8300, "Sign Face Materials." Type A reflective sheeting shall be supplied unless otherwise specified in the plans.
2. The sheeting shall be suitable for use on and shall adhere to the drum surface such that, upon vehicular impact, the sheeting shall remain adhered in-place and exhibit no delaminating, cracking, or loss of retroreflectivity other than that loss due to abrasion of the sheeting surface.

BALLAST

1. Unballasted bases shall be large enough to hold up to 50 lbs. of sand. This base, when filled with the ballast material, should weigh between 35 lbs (minimum) and 50 lbs (maximum). The ballast may be sand in one to three sandbags separate from the base, sand in a sand-filled plastic base, or other ballasting devices as approved by the Engineer. Stacking of sandbags will be allowed, however height of sandbags above pavement surface may not exceed 12 inches.
2. Bases with built-in ballast shall weigh between 40 lbs. and 50 lbs. Built-in ballast can be constructed of an integral crumb rubber base or a solid rubber base.
3. Recycled truck tire sidewalls may be used for ballast on drums approved for this type of ballast on the CWZTCD list.
4. The ballast shall not be heavy objects, water, or any material that would become hazardous to motorists, pedestrians, or workers when the drum is struck by a vehicle.
5. When used in regions susceptible to freezing, drums shall have drainage holes in the bottoms so that water will not collect and freeze becoming a hazard when struck by a vehicle.
6. Ballast shall not be placed on top of drums.
7. Adhesives may be used to secure base of drums to pavement.

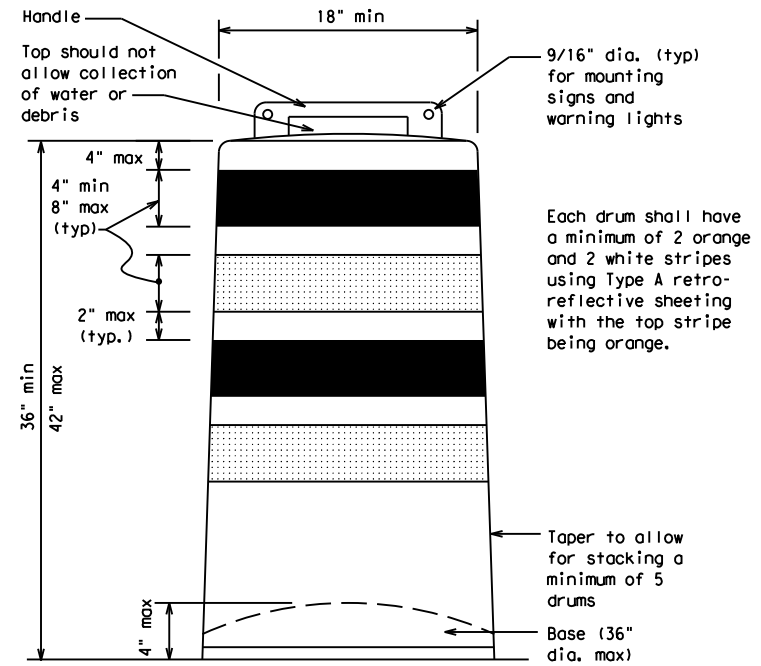

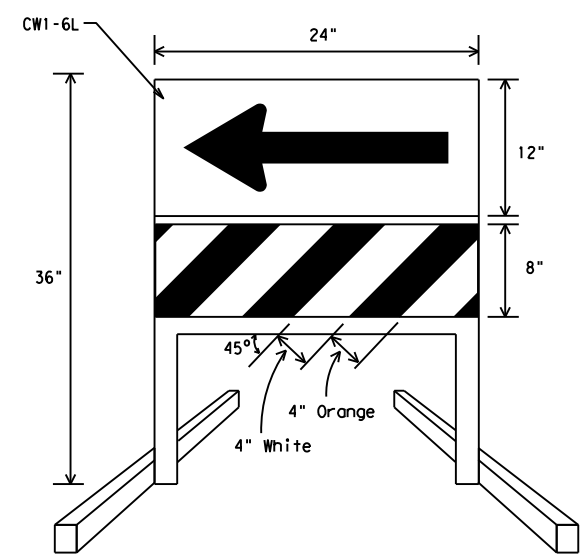

DIRECTION INDICATOR BARRICADE

1. The Direction Indicator Barricade may be used in tapers, transitions, and other areas where specific directional guidance to drivers is necessary.
2. If used, the Direction Indicator Barricade should be used in series to direct the driver through the transition and into the intended travel lane.
3. The Direction Indicator Barricade shall consist of One-Direction Large Arrow (CW1-6) sign in the size shown with a black arrow on a background of Type B_{FL} or Type C_{FL} Orange retroreflective sheeting above a rail with Type A retroreflective sheeting in alternating 4" white and orange stripes sloping downward at an angle of 45 degrees in the direction road users are to pass. Sheeting types shall be as per DMS 8300.
4. Double arrows on the Direction Indicator Barricade will not be allowed.
5. Approved manufacturers are shown on the CWZTCD List. Ballast shall be as approved by the manufacturers instructions.

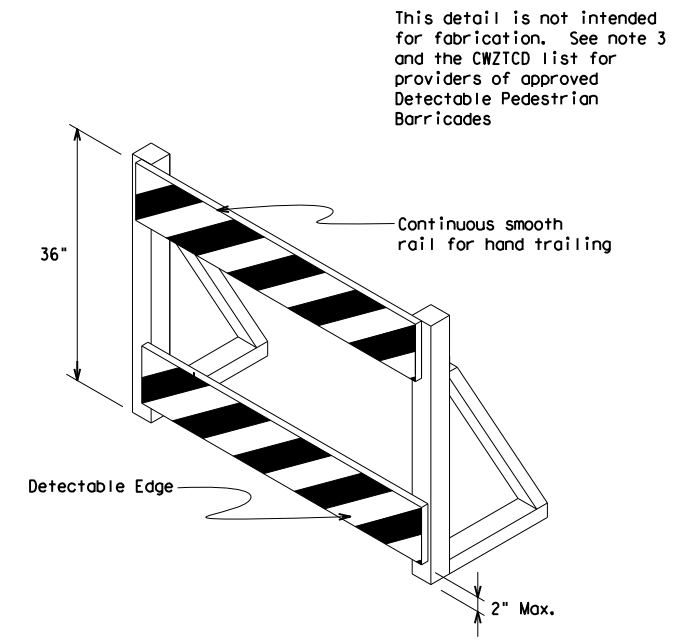

DETECTABLE PEDESTRIAN BARRICADES

1. When existing pedestrian facilities are disrupted, closed, or relocated in a TTC zone, the temporary facilities shall be detectable and include accessibility features consistent with the features present in the existing pedestrian facility.
2. Where pedestrians with visual disabilities normally use the closed sidewalk, a device that is detectable by a person with a visual disability traveling with the aid of a long cane shall be placed across the full width of the closed sidewalk.
3. Detectable pedestrian barricades similar to the one pictured above, longitudinal channelizing devices, some concrete barriers, and wood or chain link fencing with a continuous detectable edging can satisfactorily delineate a pedestrian path.
4. Tape, rope, or plastic chain strung between devices are not detectable, do not comply with the design standards in the "Americans with Disabilities Act Accessibility Guidelines for Buildings and Facilities (ADAAG)" and should not be used as a control for pedestrian movements.
5. Warning lights shall not be attached to detectable pedestrian barricades.
6. Detectable pedestrian barricades may use 8" nominal barricade rails as shown on BC(10) provided that the top rail provides a smooth continuous rail suitable for hand trailing with no splinters, burrs, or sharp edges.

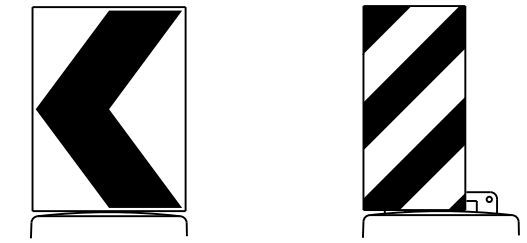

18" x 24" Sign
(Maximum Sign Dimension)
Chevron CW1-8, Opposing Traffic Lane Divider, Driveway sign D70a, Keep Right R4 series or other signs as approved by Engineer

12" x 24"
Vertical Panel mount with diagonals sloping down towards travel way

Plywood, Aluminum or Metal sign substrates shall NOT be used on plastic drums

SIGNS, CHEVRONS, AND VERTICAL PANELS MOUNTED ON PLASTIC DRUMS

1. Signs used on plastic drums shall be manufactured using substrates listed on the CWZTCD.
2. Chevrons and other work zone signs with an orange background shall be manufactured with Type B_{FL} or Type C_{FL} Orange sheeting meeting the color and retroreflectivity requirements of DMS-8300, "Sign Face Material," unless otherwise specified in the plans.
3. Vertical Panels shall be manufactured with orange and white sheeting meeting the requirements of DMS-8300 Type A Diagonal stripes on Vertical Panels shall slope down toward the intended traveled lane.
4. Other sign messages (text or symbolic) may be used as approved by the Engineer. Sign dimensions shall not exceed 18 inches in width or 24 inches in height, except for the R9 series signs discussed in note 8 below.
5. Signs shall be installed using a 1/2 inch bolt (nominal) and nut, two washers, and one locking washer for each connection.
6. Mounting bolts and nuts shall be fully engaged and adequately torqued. Bolts should not extend more than 1/2 inch beyond nuts.
7. Chevrons may be placed on drums on the outside of curves, on merging tapers or on shifting tapers. When used in these locations they may be placed on every drum or spaced not more than on every third drum. A minimum of three (3) should be used at each location called for in the plans.
8. R9-9, R9-10, R9-11 and R9-11a Sidewalk Closed signs which are 24 inches wide may be mounted on plastic drums, with approval of the Engineer.

Texas Department of Transportation — Traffic Operations Division Standard

BARRICADE AND CONSTRUCTION CHANNELIZING DEVICES

BC(8)-14

FILE: bc-14.dgn	DN: TxDOT	CK: TxDOT	DW: TxDOT	CK: TxDOT
© TxDOT November 2002	MAINTENANCE PROJECT NO.		HIGHWAY	
REVISIONS	RMC 6294-03-001		IH 10, ETC	
4-03 7-13	DIST	COUNTY		SHEET NO.
9-07 8-14	ELP	EL PASO		14

102

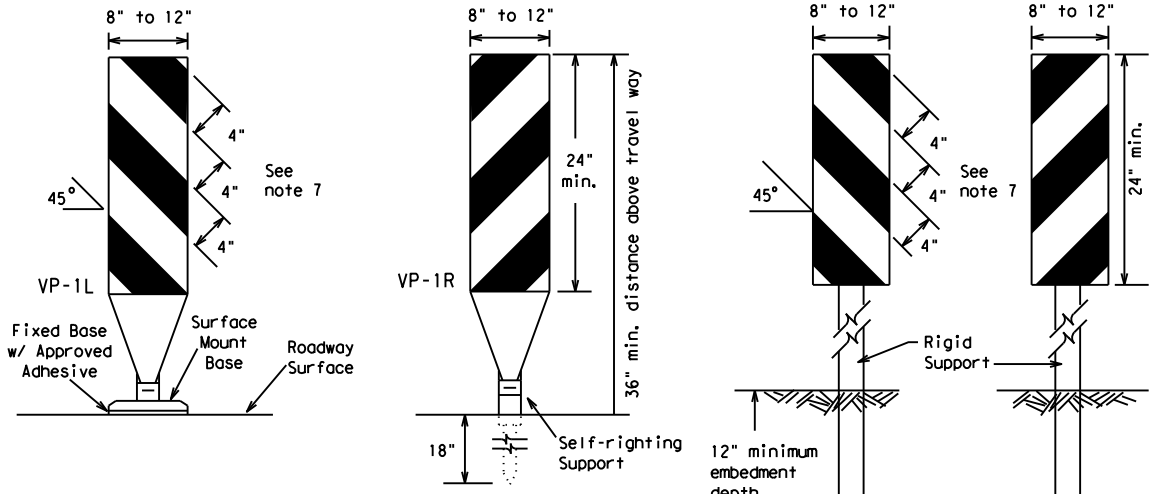

FIXED

(Rigid or self-righting)

DRIVEABLE

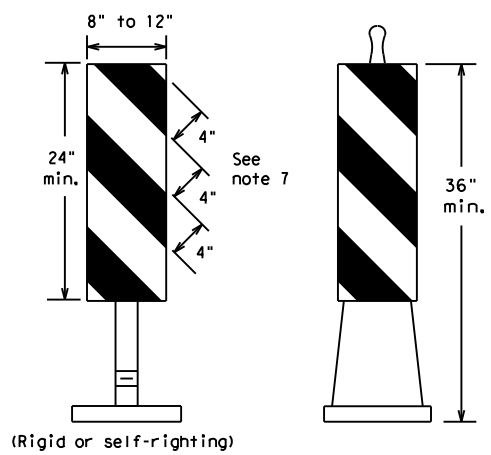

(Rigid or self-righting)

PORTABLE

1. Vertical Panels (VP's) are normally used to channelize traffic or divide opposing lanes of traffic.
2. VP's may be used in daytime or nighttime situations. They may be used at the edge of shoulder drop-offs and other areas such as lane transitions where positive daytime and nighttime delineation is required. The Engineer/Inspector shall refer to the Roadway Design Manual Appendix B "Treatment of Pavement Drop-offs in Work Zones" for additional guidelines on the use of VP's for drop-offs.
3. VP's should be mounted back to back if used at the edge of cuts adjacent to two-way two lane roadways. Stripes are to be reflective orange and reflective white and should always slope downward toward the travel lane.
4. VP's used on expressways and freeways or other high speed roadways, may have more than 270 square inches of retroreflective area facing traffic.
5. Self-righting supports are available with portable base. See "Compliant Work Zone Traffic Control Devices List" (CWZTCD).
6. Sheeting for the VP's shall be retroreflective Type A conforming to Departmental Material Specification DMS-8300, unless noted otherwise.
7. Where the height of reflective material on the vertical panel is 36 inches or greater, a panel stripe of 6 inches shall be used.

VERTICAL PANELS (VPs)

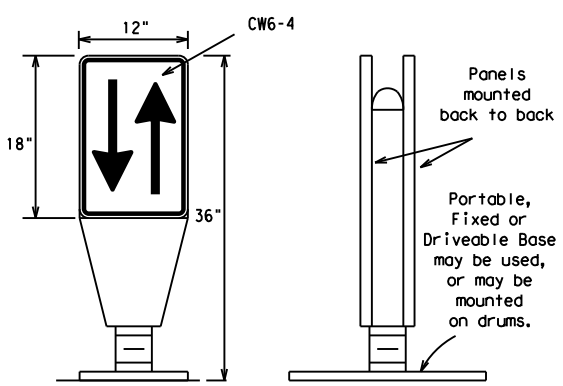

1. Opposing Traffic Lane Dividers (OTLD) are delineation devices designed to convert a normal one-way roadway section to two-way operation. OTLD's are used on temporary centerlines. The upward and downward arrows on the sign's face indicate the direction of traffic on either side of the divider. The base is secured to the pavement with an adhesive or rubber weight to minimize movement caused by a vehicle impact or wind gust.
2. The OTLD may be used in combination with 42" cones or VPs.
3. Spacing between the OTLD shall not exceed 500 feet. 42" cones or VPs placed between the OTLD's should not exceed 100 foot spacing.
4. The OTLD shall be orange with a black non-reflective legend. Sheeting for the OTLD shall be retroreflective Type B_{FL} or Type C_{FL} conforming to Departmental Material Specification DMS-8300, unless noted otherwise. The legend shall meet the requirements of DMS-8300.

OPPOSING TRAFFIC LANE DIVIDERS (OTLD)

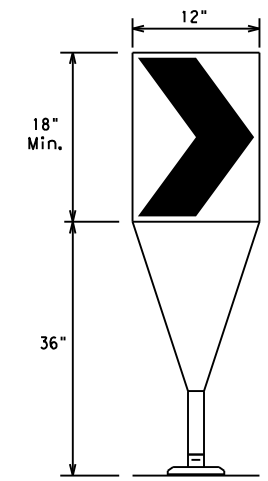

Fixed Base w/ Approved Adhesive (Driveable Base, or Flexible Support can be used)

1. The chevron shall be a vertical rectangle with a minimum size of 12 by 18 inches.
2. Chevrons are intended to give notice of a sharp change of alignment with the direction of travel and provide additional emphasis and guidance for vehicle operators with regard to changes in horizontal alignment of the roadway.
3. Chevrons, when used, shall be erected on the outside of a sharp curve or turn, or on the far side of an intersection. They shall be in line with and at right angles to approaching traffic. Spacing should be such that the motorist always has three in view, until the change in alignment eliminates its need.
4. To be effective, the chevron should be visible for at least 500 feet.
5. Chevrons shall be orange with a black nonreflective legend. Sheeting for the chevron shall be retroreflective Type B_{FL} or Type C_{FL} conforming to Departmental Material Specification DMS-8300, unless noted otherwise. The legend shall meet the requirements of DMS-8300.
6. For Long Term Stationary use on tapers or transitions on freeways and divided highways self-righting chevrons may be used to supplement plastic drums but not to replace plastic drums.

CHEVRONS

GENERAL NOTES

1. Work Zone channelizing devices illustrated on this sheet may be installed in close proximity to traffic and are suitable for use on high or low speed roadways. The Engineer/Inspector shall ensure that spacing and placement is uniform and in accordance with the "Texas Manual on Uniform Traffic Control Devices" (TMUTCD).
2. Channelizing devices shown on this sheet may have a driveable, fixed or portable base. The requirement for self-righting channelizing devices must be specified in the General Notes or other plan sheets.
3. Channelizing devices on self-righting supports should be used in work zone areas where channelizing devices are frequently impacted by errant vehicles or vehicle related wind gusts making alignment of the channelizing devices difficult to maintain. Locations of these devices shall be detailed elsewhere in the plans. These devices shall conform to the TMUTCD and the "Compliant Work Zone Traffic Control Devices List" (CWZTCD).
4. The Contractor shall maintain devices in a clean condition and replace damaged, nonreflective, faded, or broken devices and bases as required by the Engineer/Inspector. The Contractor shall be required to maintain proper device spacing and alignment.
5. Portable bases shall be fabricated from virgin and/or recycled rubber. The portable bases shall weigh a minimum of 30 lbs.
6. Pavement surfaces shall be prepared in a manner that ensures proper bonding between the adhesives, the fixed mount bases and the pavement surface. Adhesives shall be prepared and applied according to the manufacturer's recommendations.
7. The installation and removal of channelizing devices shall not cause detrimental effects to the final pavement surfaces, including pavement surface discoloration or surface integrity. Driveable bases shall not be permitted on final pavement surfaces. The Engineer/Inspector shall approve all application and removal procedures of fixed bases.

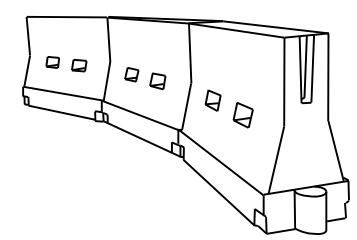

LONGITUDINAL CHANNELIZING DEVICES (LCD)

1. LCDs are crashworthy, lightweight, deformable devices that are highly visible, have good target value and can be connected together. They are not designed to contain or redirect a vehicle on impact.
2. LCDs may be used instead of a line of cones or drums.
3. LCDs shall be placed in accordance to application and installation requirements specific to the device, and used only when shown on the CWZTCD list.
4. LCDs should not be used to provide positive protection for obstacles, pedestrians or workers.
5. LCDs shall be supplemented with retroreflective delineation as required for temporary barriers on BC(7) when placed roughly parallel to the travel lanes.
6. LCDs used as barricades placed perpendicular to traffic should have at least one row of reflective sheeting meeting the requirements for barricade rails as shown on BC(10) placed near the top of the LCD along the full length of the device.

WATER BALLASTED SYSTEMS USED AS BARRIERS

1. Water ballasted systems used as barriers shall not be used solely to channelize road users, but also to protect the work space per the appropriate NCHRP 350 crashworthiness requirements based on roadway speed and barrier application.
2. Water ballasted systems used to channelize vehicular traffic shall be supplemented with retroreflective delineation or channelizing devices to improve daytime/nighttime visibility. They may also be supplemented with pavement markings.
3. Water ballasted systems used as barriers shall be placed in accordance to application and installation requirements specific to the device, and used only when shown on the CWZTCD list.
4. Water ballasted systems used as barriers should not be used for a merging taper except in low speed (less than 45 MPH) urban areas. When used on a taper in a low speed urban area, the taper shall be delineated and the taper length should be designed to optimize road user operations considering the available geometric conditions.
5. When water ballasted systems used as barriers have blunt ends exposed to traffic, they should be attenuated as per manufacturer recommendations or flared to a point outside the clear zone.

If used to channelize pedestrians, longitudinal channelizing devices or water ballasted systems must have a continuous detectable bottom for users of long canes and the top of the unit shall not be less than 32 inches in height.

HOLLOW OR WATER BALLASTED SYSTEMS USED AS LONGITUDINAL CHANNELIZING DEVICES OR BARRIERS

Posted Speed *	Formula	Minimum Desirable Taper Lengths **			Suggested Maximum Spacing of Channelizing Devices	
		10' Offset	11' Offset	12' Offset	On a Taper	On a Tangent
30	$L = \frac{WS^2}{60}$	150'	165'	180'	30'	60'
35		205'	225'	245'	35'	70'
40		265'	295'	320'	40'	80'
45	L = WS	450'	495'	540'	45'	90'
50		500'	550'	600'	50'	100'
55		550'	605'	660'	55'	110'
60		600'	660'	720'	60'	120'
65		650'	715'	780'	65'	130'
70		700'	770'	840'	70'	140'
75		750'	825'	900'	75'	150'
80		800'	880'	960'	80'	160'

** Taper lengths have been rounded off.
L=Length of Taper (FT.) W=Width of Offset (FT.)
S=Posted Speed (MPH)

SUGGESTED MAXIMUM SPACING OF CHANNELIZING DEVICES AND MINIMUM DESIRABLE TAPER LENGTHS

SHEET 9 OF 12

Texas Department of Transportation — Traffic Operations Division Standard

BARRICADE AND CONSTRUCTION CHANNELIZING DEVICES

BC(9)-14

FILE: bc-14.dgn	DN: TxDOT	CK: TxDOT	DW: TxDOT	CK: TxDOT
© TxDOT November 2002	MAINTENANCE PROJECT NO.		HIGHWAY	
REVISIONS 9-07 8-14 7-13	RMC 6294-03-001		IH 10, ETC	
	DIST	COUNTY		SHEET NO.
	ELP	EL PASO		15

DISCLAIMER:
The use of this standard is governed by the "Texas Engineering Practice Act". No warranty of any kind is made by TxDOT for any purpose whatsoever. TxDOT assumes no responsibility for the conversion of this standard to other formats or for incorrect results or damages resulting from its use.

DATE: 8-25-2014 1:03:08 PM
FILE: DGN:\Microstation Projects\6294-03-001_Mowing_ELP_W_FY15\Design Files\bc-14_5thru16.dgn

TYPE 3 BARRICADES

1. Refer to the Compliant Work Zone Traffic Control Devices List (CWZTCD) for details of the Type 3 Barricades and a list of all materials used in the construction of Type 3 Barricades.
2. Type 3 Barricades shall be used at each end of construction projects closed to all traffic.
3. Barricades extending across a roadway should have stripes that slope downward in the direction toward which traffic must turn in detouring. When both right and left turns are provided, the chevron striping may slope downward in both directions from the center of the barricade. Where no turns are provided at a closed road striping should slope downward in both directions toward the center of roadway.
4. Striping of rails, for the right side of the roadway, should slope downward to the left. For the left side of the roadway, striping should slope downward to the right.
5. Identification markings may be shown only on the back of the barricade rails. The maximum height of letters and/or company logos used for identification shall be 1".
6. Barricades shall not be placed parallel to traffic unless an adequate clear zone is provided.
7. Warning lights shall NOT be installed on barricades.
8. Where barricades require the use of weights to keep from turning over, the use of sandbags with dry, cohesionless sand is recommended. The sandbags will be tied shut to keep the sand from spilling and to maintain a constant weight. Sand bags shall not be stacked in a manner that covers any portion of a barricade rails reflective sheeting. Rock, concrete, iron, steel or other solid objects will NOT be permitted. Sandbags should weigh a minimum of 35 lbs and a maximum of 50 lbs. Sandbags shall be made of a durable material that tears upon vehicular impact. Rubber (such as tire inner tubes) shall not be used for sandbags. Sandbags shall only be placed along or upon the base supports of the device and shall not be suspended above ground level or hung with rope, wire, chains or other fasteners.
9. Sheeting for barricades shall be retroreflective Type A conforming to Departmental Material Specification DMS-8300 unless otherwise noted.

Barricades shall NOT be used as a sign support.

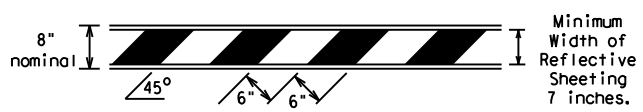

TYPICAL STRIPING DETAIL FOR BARRICADE RAIL

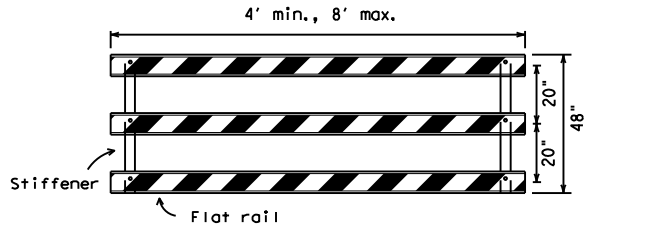

Stiffener may be inside or outside of support, but no more than 2 stiffeners shall be allowed on one barricade.

TYPICAL PANEL DETAIL FOR SKID OR POST TYPE BARRICADES

Each roadway of a divided highway shall be barricaded in the same manner.

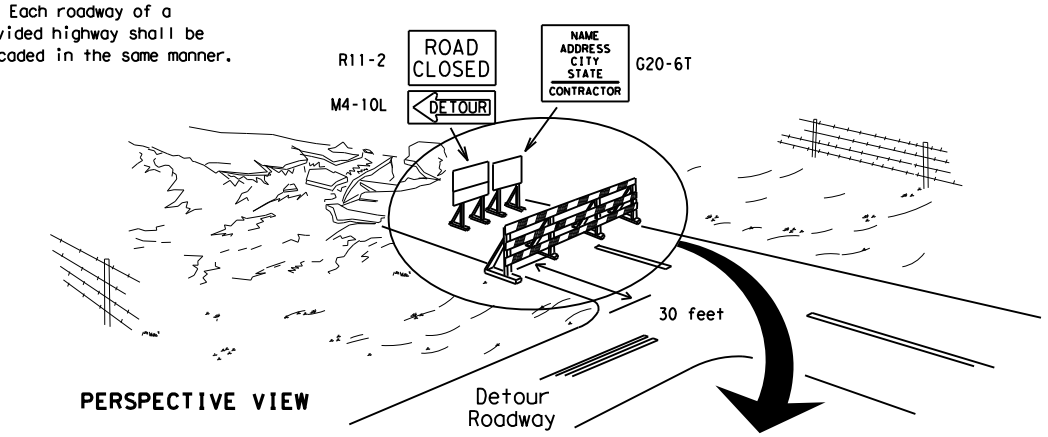

PERSPECTIVE VIEW

The three rails on Type 3 barricades shall be reflectorized orange and reflective white stripes on one side facing one-way traffic and both sides for two-way traffic.

Barricade striping should slant downward in the direction of detour.

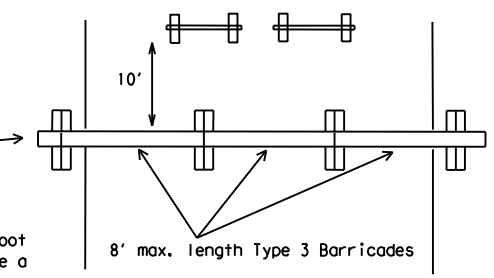

PLAN VIEW

1. Signs should be mounted on independent supports at a 7 foot mounting height in center of roadway. The signs should be a minimum of 10 feet behind Type 3 Barricades.
2. Advance signing shall be as specified elsewhere in the plans.

TYPE 3 BARRICADE (POST AND SKID) TYPICAL APPLICATION

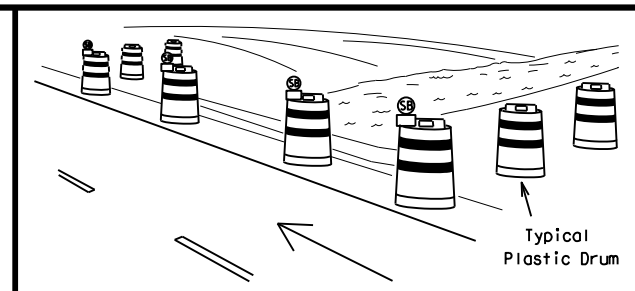

PERSPECTIVE VIEW

1. Where positive redirectional capability is provided, drums may be omitted.
2. Plastic construction fencing may be used with drums for safety as required in the plans.
3. Vertical Panels on flexible support may be substituted for drums when the shoulder width is less than 4 feet.
4. When the shoulder width is greater than 12 feet, steady-burn lights may be omitted if drums are used.
5. Drums must extend the length of the culvert widening.

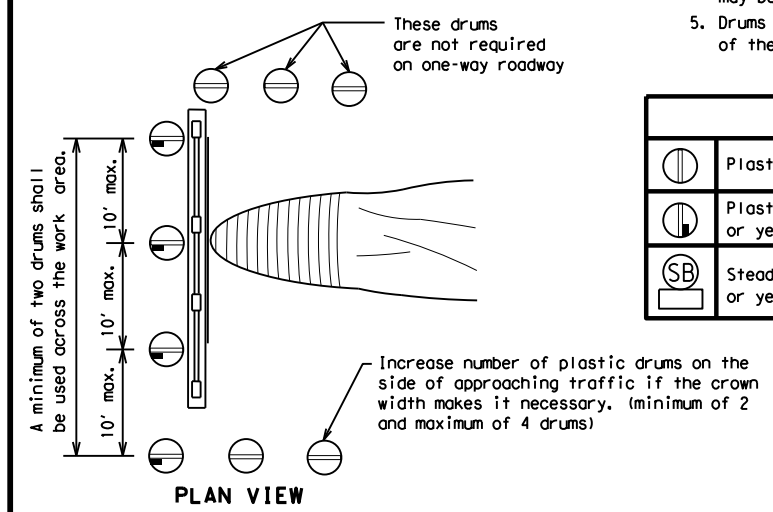

PLAN VIEW

LEGEND	
	Plastic drum
	Plastic drum with steady burn light or yellow warning reflector
SB	Steady burn warning light or yellow warning reflector

CULVERT WIDENING OR OTHER ISOLATED WORK WITHIN THE PROJECT LIMITS

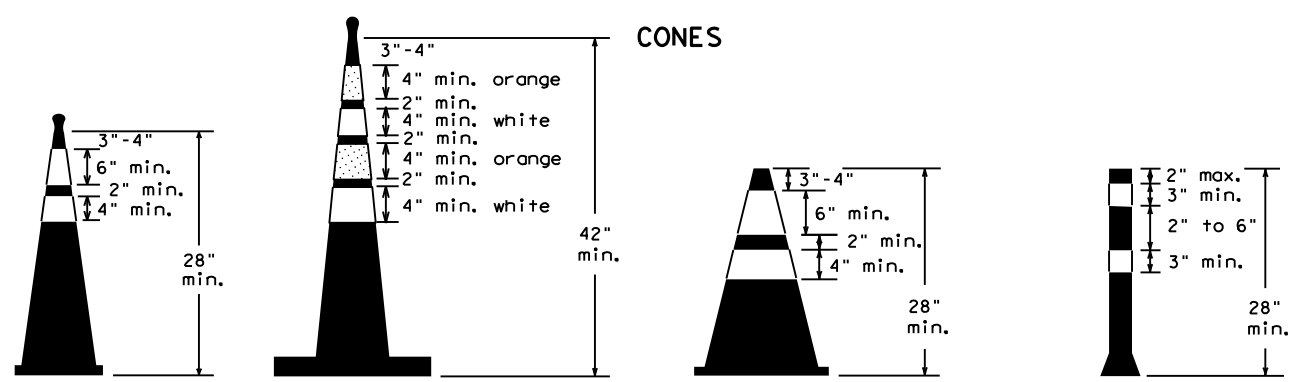

Two-Piece cones

One-Piece cones

Tubular Marker

28" Cones shall have a minimum weight of 9 1/2 lbs.

42" 2-piece cones shall have a minimum weight of 30 lbs. including base.

1. Traffic cones and tubular markers shall be predominantly orange, and meet the height and weight requirements shown above.
2. One-piece cones have the body and base of the cone molded in one consolidated unit. Two-piece cones have a cone shaped body and a separate rubber base, or ballast, that is added to keep the device upright and in place.
3. Two-piece cones may have a handle or loop extending up to 8" above the minimum height shown, in order to aid in retrieving the device.
4. Cones or tubular markers used at night shall have white or white and orange reflective bands as shown above. The reflective bands shall have a smooth, sealed outer surface and meet the requirements of Departmental Material Specification DMS-8300 Type A.
5. 28" cones and tubular markers are generally suitable for short duration and short-term stationary work as defined on BC(4). These should not be used for intermediate-term or long-term stationary work unless personnel is on-site to maintain them in their proper upright position.
6. 42" two-piece cones, vertical panels or drums are suitable for all work zone durations.
7. Cones or tubular markers used on each project should be of the same size and shape.

THIS DEVICE SHALL NOT BE USED ON PROJECTS LET AFTER MARCH 2014.

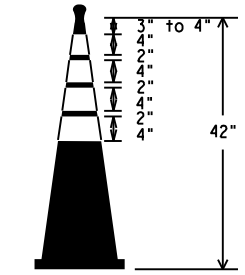

EDGELINE CHANNELIZER

1. This device is intended only for use in place of a vertical panel to channelize traffic by indicating the edge of the travel lane. It is not intended to be used in transitions or tapers.
2. This device shall not be used to separate lanes of traffic (opposing or otherwise) or warn of objects.
3. This device is based on a 42 inch, two-piece cone with an alternate striping pattern: four 4 inch retroreflective bands, with an approximate 2 inch gap between bands. The color of the band should correspond to the color of the edgeline (yellow for left edgeline, white for right edgeline) for which the device is substituted or for which it supplements. The reflectorized bands shall be retroreflective Type A conforming to Departmental Material Specification DMS-8300, unless otherwise noted.
4. The base must weigh a minimum of 30 lbs.

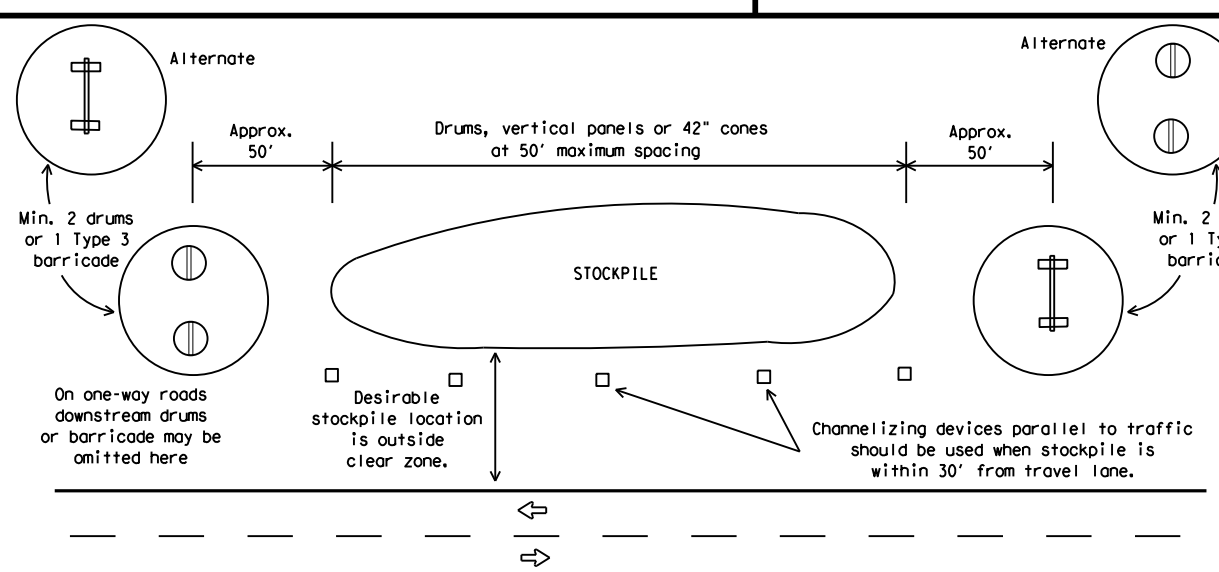

TRAFFIC CONTROL FOR MATERIAL STOCKPILES

SHEET 10 OF 12

Texas Department of Transportation — Traffic Operations Division Standard

BARRICADE AND CONSTRUCTION CHANNELIZING DEVICES

BC(10)-14

FILE: bc-14.dgn	DN: TxDOT	CK: TxDOT	DW: TxDOT	CK: TxDOT
© TxDOT November 2002	MAINTENANCE PROJECT NO.		HIGHWAY	
REVISIONS 9-07 8-14 7-13	RMC 6294-03-001		IH 10, ETC	
	DIST	COUNTY		SHEET NO.
	ELP	EL PASO		16

104

DISCLAIMER:
The use of this standard is governed by the "Texas Engineering Practice Act". No warranty of any kind is made by TxDOT for any purpose whatsoever. TxDOT assumes no responsibility for the conversion of this standard to other formats or for incorrect results or damages resulting from its use.

DATE: 8/25/2015 1:04:11 PM
FILE: DGN\BC14MAINT.dgn Microstation Projects\6294-03-001_Mowing_ELP_W_FY15\Design Files\bc-14_5thru16.dgn

WORK ZONE PAVEMENT MARKINGS

GENERAL

1. The Contractor shall be responsible for maintaining work zone and existing pavement markings, in accordance with the standard specifications and special provisions, on all roadways open to traffic within the CSJ limits unless otherwise stated in the plans.
2. Color, patterns and dimensions shall be in conformance with the "Texas Manual on Uniform Traffic Control Devices" (TMUTCD).
3. Additional supplemental pavement marking details may be found in the plans or specifications.
4. Pavement markings shall be installed in accordance with the TMUTCD and as shown on the plans.
5. When short term markings are required on the plans, short term markings shall conform with the TMUTCD, the plans and details as shown on the Standard Plan Sheet WZ(STPM).
6. When standard pavement markings are not in place and the roadway is opened to traffic, DO NOT PASS signs shall be erected to mark the beginning of the sections where passing is prohibited and PASS WITH CARE signs at the beginning of sections where passing is permitted.
7. All work zone pavement markings shall be installed in accordance with Item 662, "Work Zone Pavement Markings."

RAISED PAVEMENT MARKERS

1. Raised pavement markers are to be placed according to the patterns on BC(12).
2. All raised pavement markers used for work zone markings shall meet the requirements of Item 672, "RAISED PAVEMENT MARKERS" and Departmental Material Specification DMS-4200 or DMS-4300.

PREFABRICATED PAVEMENT MARKINGS

1. Removable prefabricated pavement markings shall meet the requirements of DMS-8241.
2. Non-removable prefabricated pavement markings (foil back) shall meet the requirements of DMS-8240.

MAINTAINING WORK ZONE PAVEMENT MARKINGS

1. The Contractor will be responsible for maintaining work zone pavement markings within the work limits.
2. Work zone pavement markings shall be inspected in accordance with the frequency and reporting requirements of work zone traffic control device inspections as required by Form 599.
3. The markings should provide a visible reference for a minimum distance of 300 feet during normal daylight hours and 160 feet when illuminated by automobile low-beam headlights at night, unless sight distance is restricted by roadway geometrics.
4. Markings failing to meet this criteria within the first 30 days after placement shall be replaced at the expense of the Contractor as per Specification Item 662.

REMOVAL OF PAVEMENT MARKINGS

1. Pavement markings that are no longer applicable, could create confusion or direct a motorist toward or into the closed portion of the roadway shall be removed or obliterated before the roadway is opened to traffic.
2. The above shall not apply to detours in place for less than three days, where flaggers and/or sufficient channelizing devices are used in lieu of markings to outline the detour route.
3. Pavement markings shall be removed to the fullest extent possible, so as not to leave a discernable marking. This shall be by any method approved by TxDOT Specification Item 677 for "Eliminating Existing Pavement Markings and Markers".
4. The removal of pavement markings may require resurfacing or seal coating portions of the roadway as described in Item 677.
5. Subject to the approval of the Engineer, any method that proves to be successful on a particular type pavement may be used.
6. Blast cleaning may be used but will not be required unless specifically shown in the plans.
7. Over-painting of the markings SHALL NOT BE permitted.
8. Removal of raised pavement markers shall be as directed by the Engineer.
9. Removal of existing pavement markings and markers will be paid for directly in accordance with Item 677, "ELIMINATING EXISTING PAVEMENT MARKINGS AND MARKERS," unless otherwise stated in the plans.
10. Black-out marking tape may be used to cover conflicting existing markings for periods less than two weeks when approved by the Engineer.

Temporary Flexible-Reflective Roadway Marker Tabs

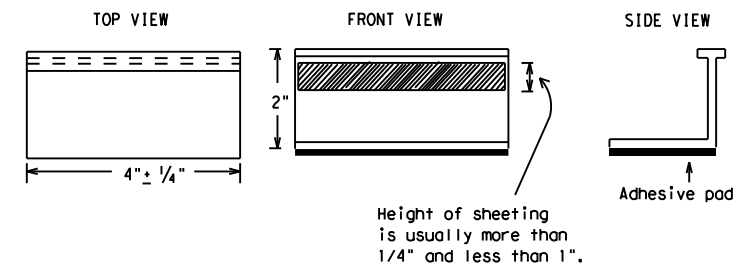

STAPLES OR NAILS SHALL NOT BE USED TO SECURE TEMPORARY FLEXIBLE-REFLECTIVE ROADWAY MARKER TABS TO THE PAVEMENT SURFACE

1. Temporary flexible-reflective roadway marker tabs used as guidemarks shall meet the requirements of DMS-8242.
2. Tabs detailed on this sheet are to be inspected and accepted by the Engineer or designated representative. Sampling and testing is not normally required, however at the option of the Engineer, either "A" or "B" below may be imposed to assure quality before placement on the roadway.
   - A. Select five (5) or more tabs at random from each lot or shipment and submit to the Construction Division, Materials and Pavement section to determine specification compliance.
   - B. Select five (5) tabs and perform the following test. Affix five (5) tabs at 24 inch intervals on an asphaltic pavement in a straight line. Using a medium size passenger vehicle or pickup, run over the markers with the front and rear tires at a speed of 35 to 40 miles per hour, four (4) times in each direction. No more than one (1) out of the five (5) reflective surfaces shall be lost or displaced as a result of this test.
3. Small design variances may be noted between tab manufacturers.
4. See Standard Sheet WZ(STPM) for tab placement on new pavements. See Standard Sheet TCP(7-1) for tab placement on seal coat work.

RAISED PAVEMENT MARKERS USED AS GUIDEMARKS

1. Raised pavement markers used as guidemarks shall be from the approved product list, and meet the requirements of DMS-4200.
2. All temporary construction raised pavement markers provided on a project shall be of the same manufacturer.
3. Adhesive for guidemarks shall be bituminous material hot applied or butyl rubber pad for all surfaces, or thermoplastic for concrete surfaces.

Guidemarks shall be designated as:
YELLOW - (two amber reflective surfaces with yellow body).
WHITE - (one silver reflective surface with white body).

DEPARTMENTAL MATERIAL SPECIFICATIONS	
PAVEMENT MARKERS (REFLECTORIZED)	DMS-4200
TRAFFIC BUTTONS	DMS-4300
EPOXY AND ADHESIVES	DMS-6100
BITUMINOUS ADHESIVE FOR PAVEMENT MARKERS	DMS-6130
PERMANENT PREFABRICATED PAVEMENT MARKINGS	DMS-8240
TEMPORARY REMOVABLE, PREFABRICATED PAVEMENT MARKINGS	DMS-8241
TEMPORARY FLEXIBLE, REFLECTIVE ROADWAY MARKER TABS	DMS-8242

A list of prequalified reflective raised pavement markers, non-reflective traffic buttons, roadway marker tabs and other pavement markings can be found at the Material Producer List web address shown on BC(1).

Texas Department of Transportation — Traffic Operations Division Standard

BARRICADE AND CONSTRUCTION PAVEMENT MARKINGS

BC(11)-14

FILE: bc-14.dgn	DN: TxDOT	CK: TxDOT	DW: TxDOT	CK: TxDOT
© TxDOT February 1998	MAINTENANCE PROJECT NO.		HIGHWAY	
REVISIONS 2-98 9-07, 1-02 7-13, 11-02 8-14	RMC 6294-03-001		IH 10, ETC	
	DIST	COUNTY		SHEET NO.
	ELP	EL PASO		17

DISCLAIMER:
The use of this standard is governed by the "Texas Engineering Practice Act". No warranty of any kind is made by TxDOT for any purpose whatsoever. TxDOT assumes no responsibility for the conversion of this standard to other formats or for incorrect results or damages resulting from its use.

DATE: 8/25/2006 1:04:56 PM
FILE: DGN:\MAINMicrostation Projects\6294-03-001_Mowing_ELP_W_FY15\Design Files\bc-14_5thru16.dgn

PAVEMENT MARKING PATTERNS

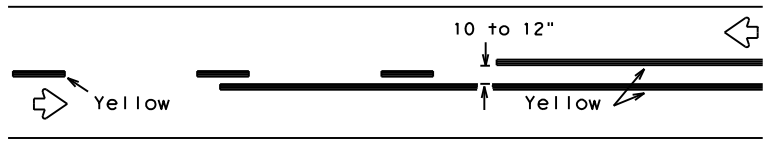

REFLECTORIZED PAVEMENT MARKINGS - PATTERN A

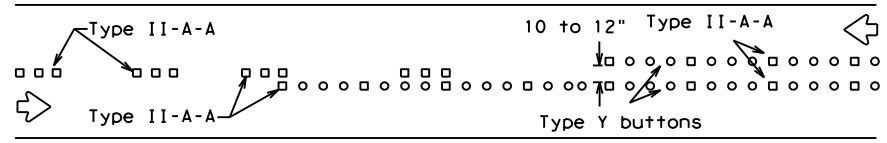

RAISED PAVEMENT MARKERS - PATTERN A

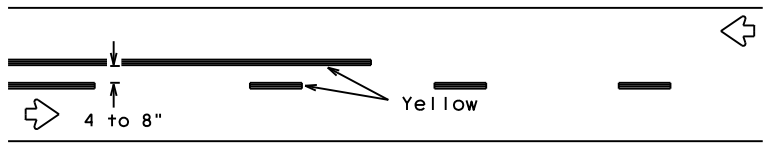

REFLECTORIZED PAVEMENT MARKINGS - PATTERN B

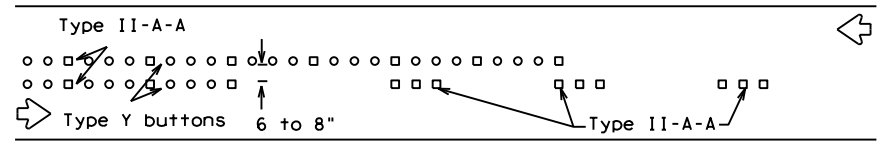

RAISED PAVEMENT MARKERS - PATTERN B

Pattern A is the TXDOT Standard, however Pattern B may be used if approved by the Engineer.
Prefabricated markings may be substituted for reflectorized pavement markings.

CENTER LINE & NO-PASSING ZONE BARRIER LINES FOR TWO-LANE, TWO-WAY HIGHWAYS

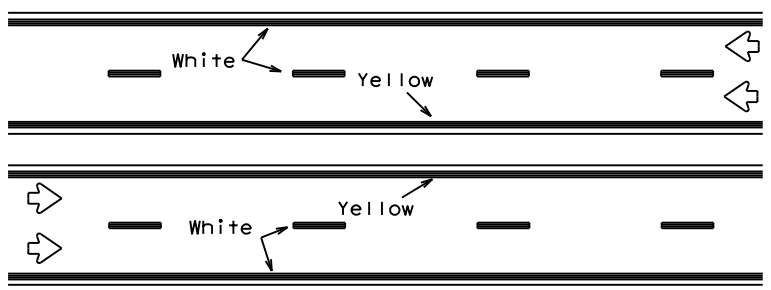

REFLECTORIZED PAVEMENT MARKINGS

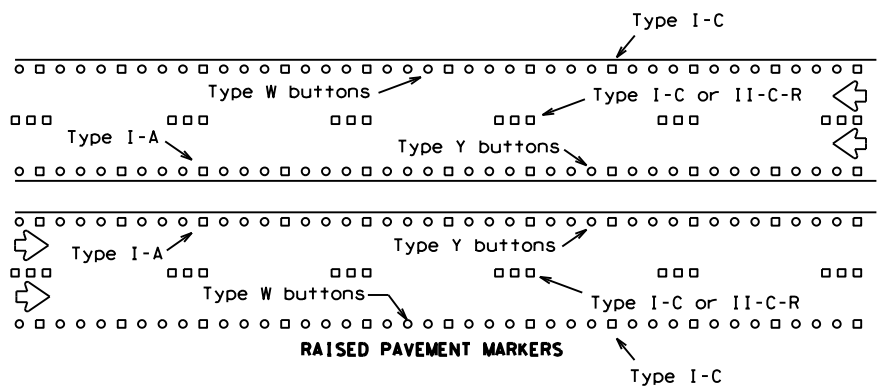

RAISED PAVEMENT MARKERS

Prefabricated markings may be substituted for reflectorized pavement markings.

EDGE & LANE LINES FOR DIVIDED HIGHWAY

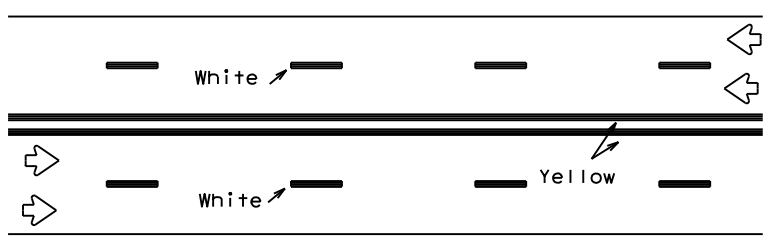

REFLECTORIZED PAVEMENT MARKINGS

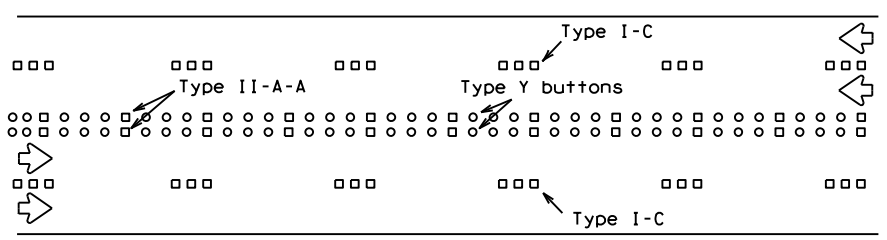

RAISED PAVEMENT MARKERS

Prefabricated markings may be substituted for reflectorized pavement markings.

LANE & CENTER LINES FOR MULTILANE UNDIVIDED HIGHWAYS

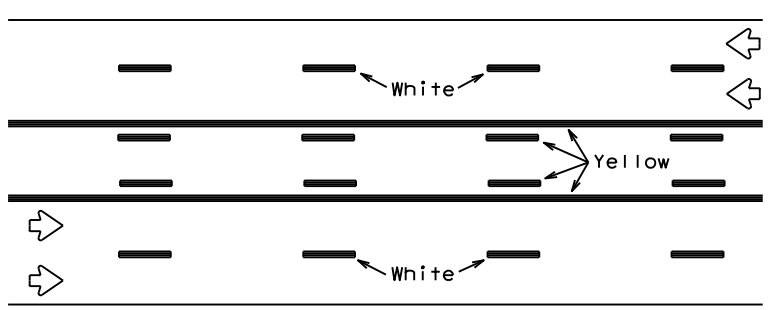

REFLECTORIZED PAVEMENT MARKINGS

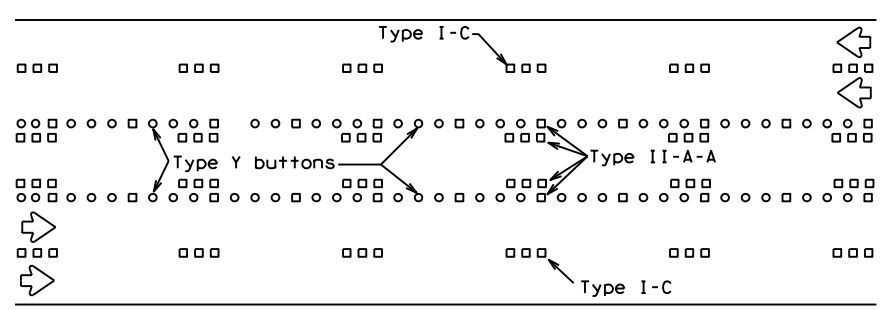

RAISED PAVEMENT MARKERS

Prefabricated markings may be substituted for reflectorized pavement markings.

TWO-WAY LEFT TURN LANE

STANDARD WORK ZONE PAVEMENT MARKINGS DETAILS

SOLID LINES

DOUBLE NO-PASSING LINE

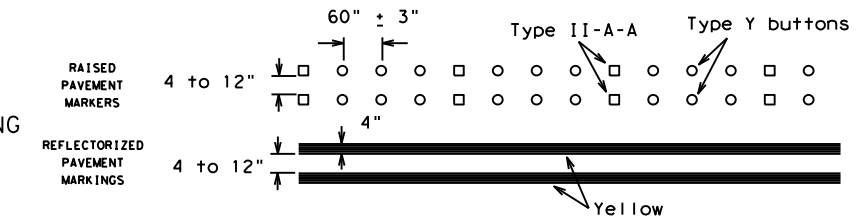

EDGE LINE OR SINGLE NO-PASSING LINE

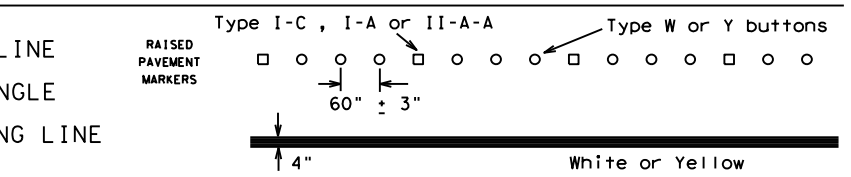

WIDE LINE

(FOR LEFT TURN CHANNELIZING LINE OR CHANNELIZING LINE USED TO DISCOURAGE LANE CHANGING.)

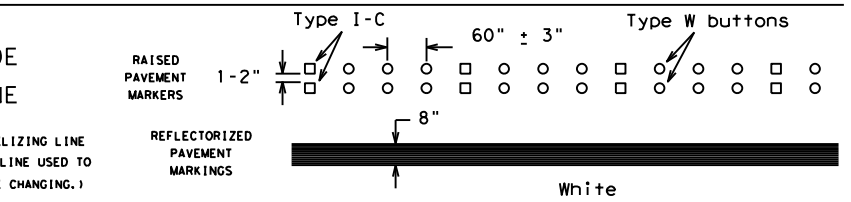

BROKEN LINES

CENTER LINE OR LANE LINE

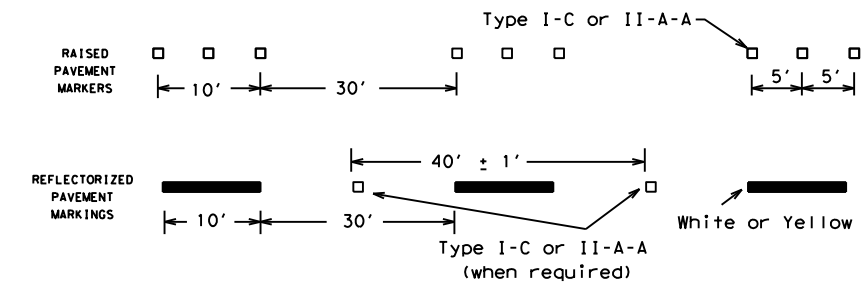

AUXILIARY OR LANEDROP LINE

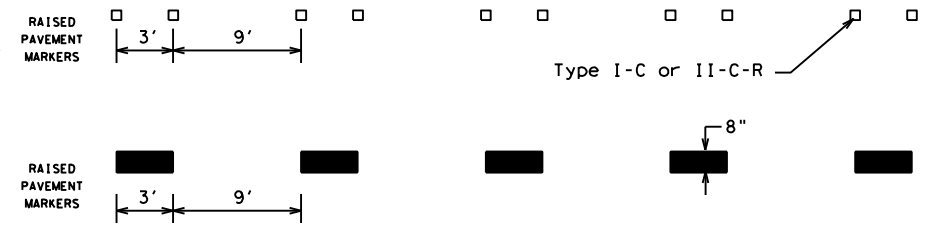

REMOVABLE MARKINGS WITH RAISED PAVEMENT MARKERS

If raised pavement markers are used to supplement REMOVABLE markings, the markers shall be applied to the top of the tape at the approximate mid length of tape used for broken lines or at 20 foot spacing for solid lines. This allows an easier removal of raised pavement markers and tape.

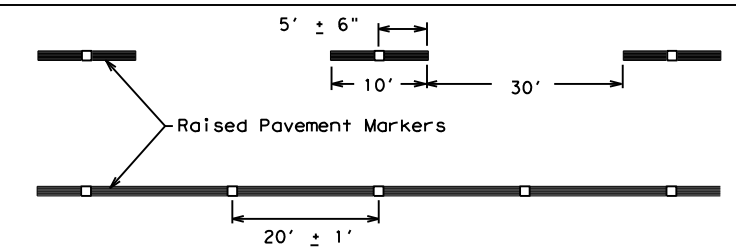

Centerline only - not to be used on edge lines

SHEET 12 OF 12

Raised pavement markers used as standard pavement markings shall be from the approved products list and meet the requirements of Item 672 "RAISED PAVEMENT MARKERS."

Texas Department of Transportation — Traffic Operations Division Standard

BARRICADE AND CONSTRUCTION PAVEMENT MARKING PATTERNS

BC(12)-14

FILE: bc-14.dgn	DN: TxDOT	CK: TxDOT	DW: TxDOT	CK: TxDOT
© TxDOT February 1998	MAINTENANCE PROJECT NO.		HIGHWAY	
REVISIONS 1-97 9-07 2-98 7-13 11-02 8-14	RMC 6294-03-001		IH 10, ETC	
	DIST	COUNTY		SHEET NO.
	ELP	EL PASO		18

106

DISCLAIMER:
The use of this standard is governed by the "Texas Engineering Practice Act". No warranty of any kind is made by TxDOT for any purpose whatsoever. TxDOT assumes no responsibility for the conversion of this standard to other formats or for incorrect results or damages resulting from its use.

DATE: 8-26/20WS 1:05:38 PM
FILE: DOCUMENT NAME: Microstation Projects\6294-03-001_Mowing_ELP_W_FY15\Design Files\bc-14_5thru16.dgn

DISCLAIMER: The use of this standard is governed by the "Texas Engineering Practice Act". No warranty of any kind is made by TxDOT for any purpose whatsoever. TxDOT assumes no responsibility for the conversion of this standard to other formats or for incorrect results or damages resulting from its use.

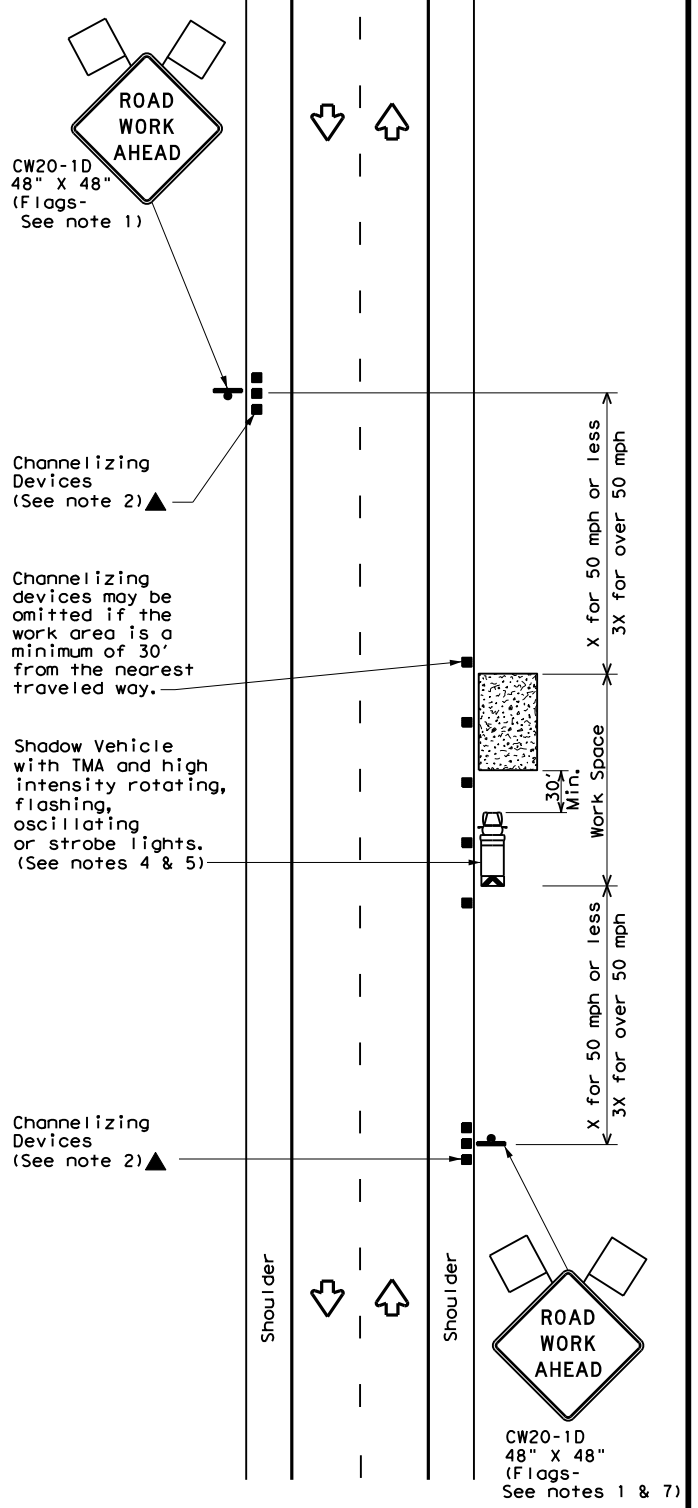

TCP (1-1a)

WORK SPACE NEAR SHOULDER

Conventional Roads

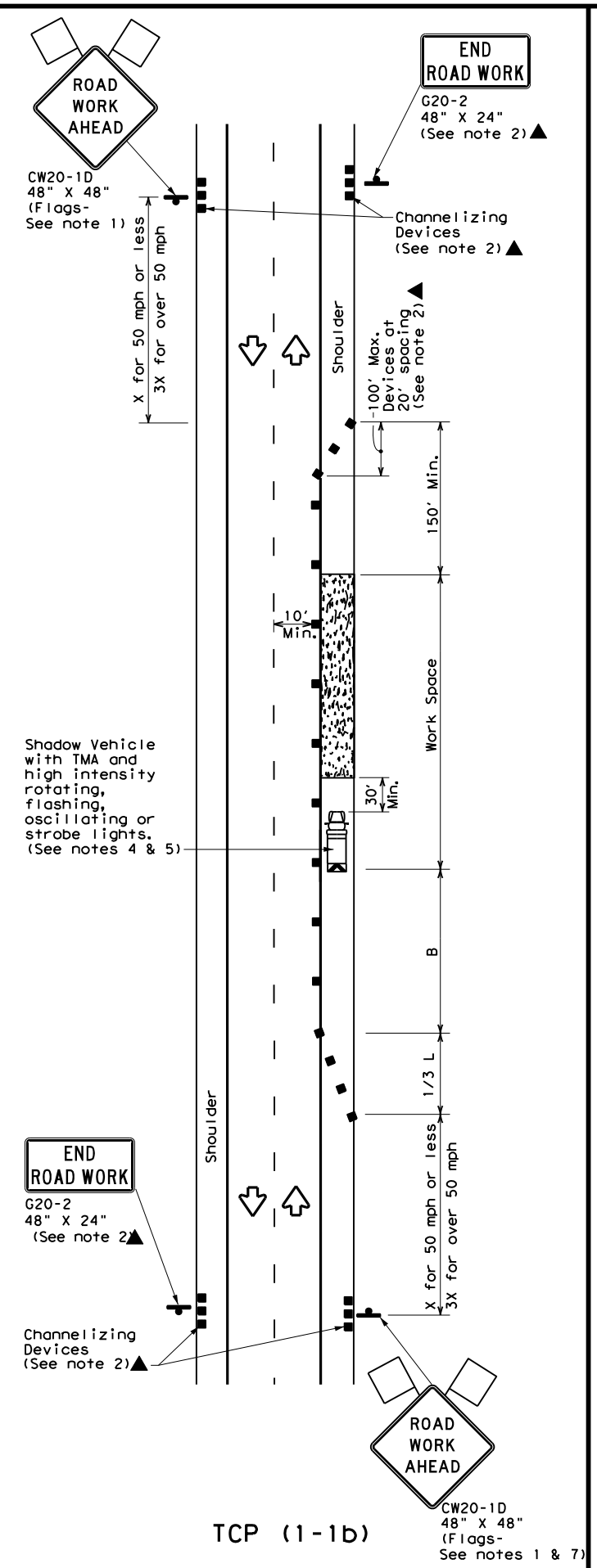

TCP (1-1b)

WORK SPACE ON SHOULDER

Conventional Roads

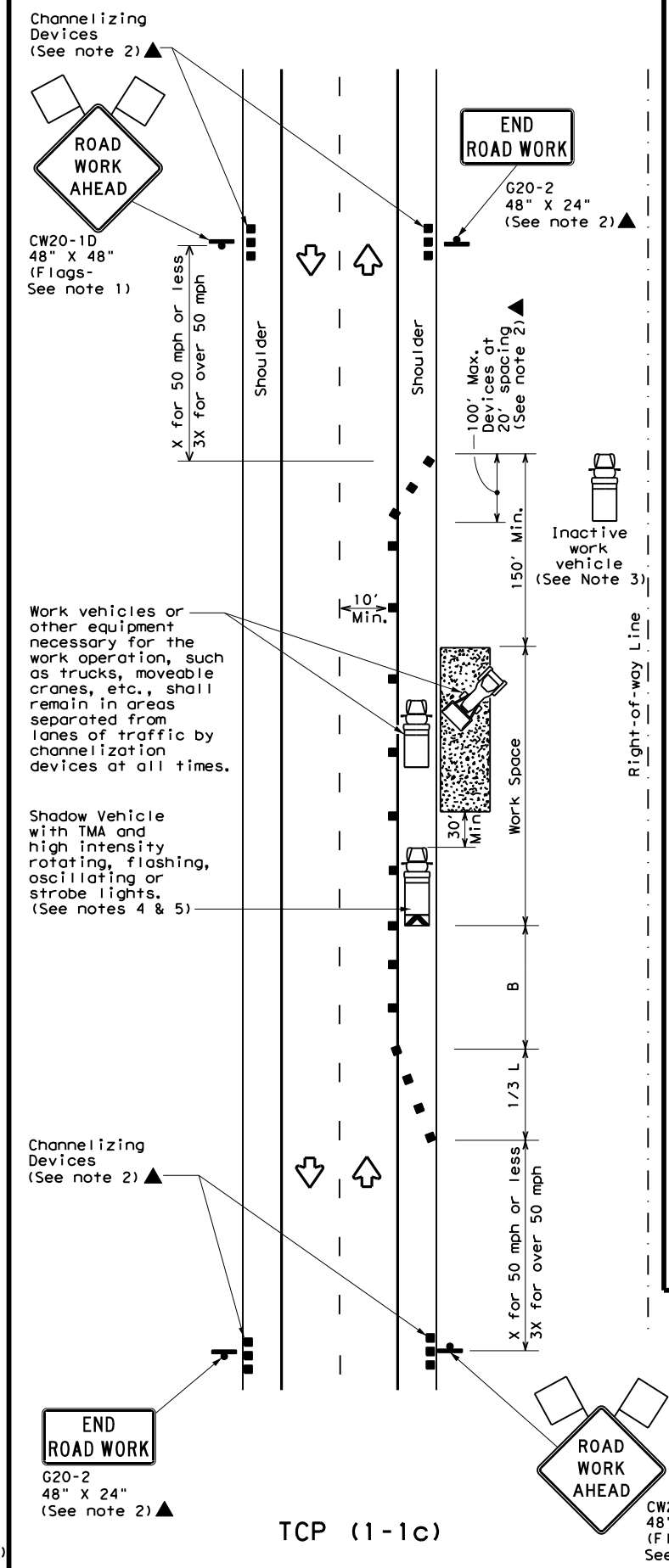

TCP (1-1c)

WORK VEHICLES ON SHOULDER

Conventional Roads

LEGEND

	Type 3 Barricade		Channelizing Devices
	Heavy Work Vehicle		Truck Mounted Attenuator (TMA)
	Trailer Mounted Flashing Arrow Board	M	Portable Changeable Message Sign (PCMS)
	Sign		Traffic Flow
	Flag		Flagger

Posted Speed *	Formula	Minimum Desirable Taper Lengths ** 10' Offset	11' Offset	12' Offset	Suggested Maximum Spacing of Channelizing Devices On a Taper	On a Tangent	Minimum Sign Spacing "X" Distance	Suggested Longitudinal Buffer Space "B"
30	$L = \frac{WS^2}{60}$	150'	165'	180'	30'	60'	120'	90'
35		205'	225'	245'	35'	70'	160'	120'
40		265'	295'	320'	40'	80'	240'	155'
45	L = WS	450'	495'	540'	45'	90'	320'	195'
50		500'	550'	600'	50'	100'	400'	240'
55		550'	605'	660'	55'	110'	500'	295'
60		600'	660'	720'	60'	120'	600'	350'
65		650'	715'	780'	65'	130'	700'	410'
70		700'	770'	840'	70'	140'	800'	475'
75		750'	825'	900'	75'	150'	900'	540'

* Conventional Roads Only

** Taper lengths have been rounded off.

L=Length of Taper(FT) W=Width of Offset(FT) S=Posted Speed(MPH)

TYPICAL USAGE

MOBILE	SHORT DURATION	SHORT TERM STATIONARY	INTERMEDIATE TERM STATIONARY	LONG TERM STATIONARY
	✓	✓		

GENERAL NOTES

1. Flags attached to signs where shown are REQUIRED.
2. All traffic control devices illustrated are REQUIRED, except those denoted with the triangle symbol may be omitted when stated elsewhere in the plans, or for routine maintenance work, when approved by the Engineer.
3. Inactive work vehicles or other equipment should be parked near the right-of-way line and not parked on the paved shoulder.
4. A Shadow Vehicle with a TMA should be used anytime it can be positioned 30 to 100 feet in advance of the area of crew exposure without adversely affecting the performance or quality of the work. If workers are no longer present but road or work conditions require the traffic control to remain in place, Type 3 Barricades or other channelizing devices may be substituted for the Shadow Vehicle and TMA.
5. Additional Shadow Vehicles with TMAs may be positioned off the paved surface, next to those shown in order to protect wider work spaces.
6. See TCP(5-1)for shoulder work on divided highways, expressways and freeways.
7. CW21-5 "SHOULDER WORK" signs may be used in place of CW20-1D "ROAD WORK AHEAD" signs for shoulder work on conventional roadways.

For construction or maintenance contract work, specific project requirements for shadow vehicles can be found in the project GENERAL NOTES for Item 502, Barricades, Signs and Traffic Handling.

Texas Department of Transportation
Traffic Operations Division

TRAFFIC CONTROL PLAN CONVENTIONAL ROAD SHOULDER WORK

TCP(1-1)-12

©TxDOT December 1985

DN: TXDOT	CK: TXDOT	DW: TXDOT	CK: TXDOT

REVISIONS
2-94 2-12
8-95
1-97
4-98

MAINTENANCE PROJECT NO.	HIGHWAY
RMC 6294-03-001	IH 10,ETC
DIST / COUNTY	SHEET NO.
ELP / EL PASO	19

DATE:
FILE:

DISCLAIMER
The use of this standard is governed by the "Texas Engineering Practice Act". No warranty of any kind is made by TxDOT for any purpose whatsoever. TxDOT assumes no responsibility for the conversion of this standard to other formats or for incorrect results or damages resulting from its use.

EXAMPLES OF SIGN SUPPORTS

△ See the CWZTCD for the type of sign substrate that can be used for each approved sign support.

SHORT TERM DURATION, DAYTIME USE ONLY PORTABLE SIGN SUPPORTS

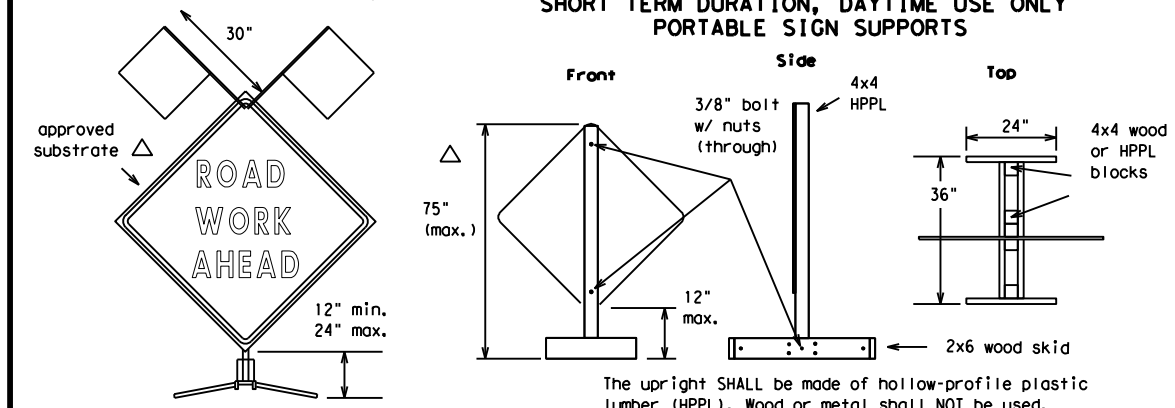

Flags as required by Engineer or as shown on plans

The upright SHALL be made of hollow-profile plastic lumber (HPPL). Wood or metal shall NOT be used.

1 Foot Mounting Height

Attachment to wooden supports will be by bolts and nuts or screws. Use TxDOT's or manufacturer's recommended procedures for attaching sign substrates to other types of sign supports.

Nails will NOT be allowed.

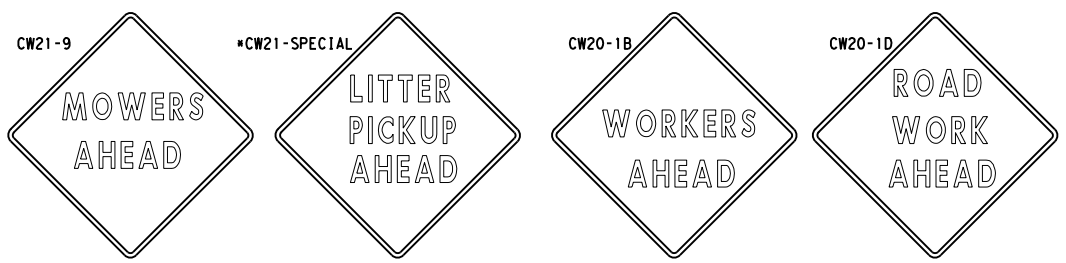

48" X 48" 48" X 48" 48" X 48" 48" X 48"

SIGN IN ACCORDANCE WITH THE TEXAS MANUAL ON UNIFORM TRAFFIC CONTROL DEVICES FOR STREETS AND HIGHWAYS

MOWERS AHEAD SIGNS ARE USED FOR MOWING OPERATIONS.

LITTER PICKUP AHEAD, ROAD WORK AHEAD AND WORKER AHEAD SIGNS ARE USED AS DIRECTED FOR OTHER MAINTENANCE OPERATIONS WHEN ALL WORK OCCURS OFF OF THE PAVED HIGHWAY SURFACE.

ROLL-UP SIGNS CONFORMING TO DMS-8310 AND THE CWZTCD ALLOWED

*Letter dimensions and spacing for "CW21-SPECIAL" is the same as C20-1D>

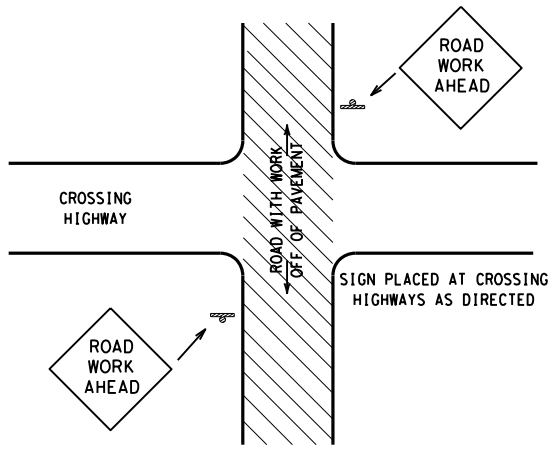

TYPICAL LOCATION OF SIGNS AT HIGHWAY CROSSING

WORK AREA IS A MAXIMUM OF 2.0 MILES UNLESS OTHERWISE DIRECTED.
SIGNS MAY REMAIN IN PLACE ONLY DURING DAYLIGHT HOURS.

SIGNS ARE TO BE PLACED 6' TO 12' OFF OF THE PAVED SURFACE UNLESS OTHERWISE DIRECTED.

ROAD WORK AHEAD SIGNS SHOWN AS EXAMPLES, ONE OF THE FOUR TYPE SIGNS WILL BE USED AS DIRECTED.

** SIGNS IN THE MEDIAN ARE REQUIRED WHEN WORK OCCURS IN MEDIAN*

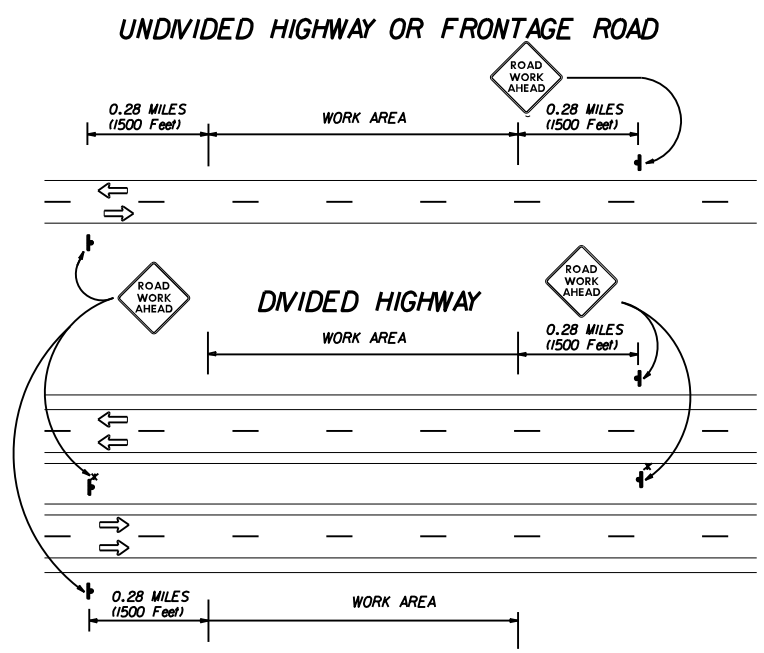

TRAFFIC CONTROL PLAN FOR WORK OFF OF THE PAVED SURFACE.

GENERAL NOTES FOR WORK ZONE SIGNS

1. Contractor shall install and maintain signs in a straight and plumb condition and/or as directed by the Engineer.
2. Wooden sign posts shall be painted white.
3. Barricades shall NOT be used as sign supports.
4. Nails shall NOT be used to attach signs to any support.
5. All signs shall be installed in accordance with the plans or as directed by the Engineer. Signs shall be used to regulate, warn, and guide the traveling public safely through the work zone.
6. The Contractor may furnish either the sign design shown in the plans or in the "Standard Highway Sign Designs for Texas" (SHSD). The Engineer/Inspector may require the Contractor to furnish other work zone signs that are shown in the TMUTCD but may have been omitted from the plans. Any variation in the plans shall be documented by written agreement between the Engineer and the Contractor's Responsible Person. All changes must be documented in writing before being implemented. This can include documenting the changes in the Inspector's TxDOT diary and having both the Inspector and Contractor initial and date the agreed upon changes. The additional signs requested by the Engineer/Inspector shall not be subsidiary.
7. The Contractor shall furnish sign supports listed in the "Compliant Work Zone Traffic Control Device List" (CWZTCD). The Contractor shall install the sign support in accordance with the manufacturer's recommendations. If there is a question regarding installation procedures, the Contractor shall furnish the Engineer a copy of the manufacturer's installation recommendations so that the Engineer can verify the correct procedures are being followed.
8. The Contractor is responsible for sign installations and replacing signs with damaged or cracked substrates and/or damaged or marred reflective sheeting as directed by the Engineer/Inspector.
9. Identification markings may be shown only on the back of the sign substrate. The maximum height of letters and/or company logos used for identification shall be 1".
10. The Contractor shall replace damaged wood posts. New or damaged wood sign posts shall not be spliced.

Duration of Work (as defined by the "Texas Manual on Uniform Traffic Control Devices" Part VI)

1. The Contractor is responsible for ensuring the sign support and substrate meets crashworthiness. For mowing operation all signs and supportS are Short-term Duration for daytime work.
2. The Contractor shall furnish the sign sizes shown on this sheet or as directed by the Engineer.

SIGN SUBSTRATES

1. The Contractor shall ensure that the sign substrate is allowed for the type of sign support that is being used. The CWZTCD lists each substrate that can be used on the different types and models of sign supports.
2. "Mesh" type materials are NOT an approved sign substrate.
3. All wooden individual sign panels fabricated from 2 or more pieces shall have one or more plywood cleat, 1/2" thick by 6" wide, fastened to the back of the sign and extending fully across the sign. The cleat shall be attached to the back of the sign using wood screws that do not penetrate the face of the sign panel. The screws shall be placed on both sides of the splice and spaced at 6" centers. The Engineer may approve other methods of splicing the sign faces.

REFLECTIVE SHEETING

1. Reflectorized signs shall be constructed of sheeting meeting the color and retro-reflectivity requirements of DMS-8300 or DMS-8310. The DMS specifications can be accessed from the following web address:
   http://manuals.dot.state.tx.us:80/dynaweb/colmates/@Generic__CollectionView;cs=default;ts=default
2. White sheeting, meeting the requirements of DMS-8300 Type C (High Specific Intensity), shall be used for signs with white background and channelizing devices.
3. Orange sheeting, meeting the requirements of DMS-8300 Type E (Fluorescent Prismatic), shall be used for signs with orange backgrounds.

SIGN LETTERS

1. All sign letters and numbers shall be clear, and open rounded type uppercase alphabet letters as approved by the Federal Highway Administration (FHWA) and as published in the "Standard Highway Sign Design for Texas" manual. Signs, letters and numbers shall be of first class workmanship in accordance with Department Standards and Specifications.

REMOVING OR COVERING

1. Signs should be removed or completely covered when not mowing.
2. Duct tape or other adhesive material shall NOT be affixed to a sign face.
3. Signs and supports shall be removed by the end of the day.

SIGN SUPPORT WEIGHTS

1. Where sign supports require the use of weights to keep from turning over, the use of sandbags with dry cohesionless sand is recommended.
2. The sandbags will be tied shut to keep the sand from spilling and to maintain a constant weight.
3. Rock, concrete, iron, steel or other solid objects will not be permitted for use as sign support weights.
4. Sandbags should weigh a minimum of 35 lbs and a maximum of 50 lbs.
5. Sandbags shall be made of a durable material that tears upon vehicular impact.
6. Rubber (such as tire inner tubes) shall NOT be used for sandbags.
7. Rubber ballasts (such as those used with cones or edgeline channelizers) shall NOT be used as sign support weights.
8. Sandbags shall only be placed along or laid over the base supports of the traffic control device and shall not be suspended above ground level or hung with rope, wire, chains or other fasteners. Sandbags shall be placed along the length of the skids to weigh down the sign supports.
9. Sandbags shall NOT be placed under the skid and shall not be used to level sign supports placed on slopes.

CONTRACTOR REQUIREMENTS FOR MAINTAINING PERMANENT SIGNS WITHIN THE PROJECT LIMITS

Any sign, sign support or traffic control device that is struck or damaged by the Contractor or his/her construction equipment shall be replaced or repaired as soon as possible by the Contractor at the Contractor's expense.

Only pre-qualified products shall be used. A copy of the "Compliant Work Zone Traffic Control Devices List" (CWZTCD) describes pre-qualified products and their sources and may be obtained by contacting:

Standards Engineer
Traffic Operations Division - TE
Texas Department of Transportation
125 East 11th Street
Austin, Texas 78701-2483
Phone (512) 416-3120
Fax (512) 416-3299

Instructions to locate the "CWZTCD" on TxDOT website are:

Start at website - www.dot.state.tx.us
Click on "About TxDOT",
Click on "Organizational Chart",
Click on Traffic Operations Box,
Click on "Compliant Work Zone Traffic Control Devices",
Click on "View PDF".
This site is printable.

Texas Department of Transportation
Maintenance Division
Standard Plans

ROADSIDE TRAFFIC CONTROL PLAN

SHEET 1 OF 1 — RS-TCP-05 — NOT TO SCALE

FILE: RSTCP05.DGN	DN: LJB	CK: JG	DW: -	CK: -	NEG NO.:
© TxDOT FEBRUARY 2005	STATE DISTRICT	FEDERAL REGION	MAINTENANCE PROJECT NO.		SHEET
REVISED: September 17, 2004			MPN		20
REVISED: FEBRUARY 2, 2005 Sign placement in TCP	COUNTY	CONTROL	SECTION	JOB	HIGHWAY
REVISED:	EL PASO	6294	03	001	IH 10,ETC

LEVELS DISPLAYED

1	2	3	4	5	6	7	8	9	10	11	12	13	14	15	16																
17	18	19	20	21	22	23	24	25	26	27	28	29	30	31	32																
33	34	35	36	37	38	39	40	41	42	43	44	45	46	47	48																
49	50	51	52	53	54	55	56	57	58	59	60	61	62	63																	

CONTROL : 6294-03-001
PROJECT : RMC - 629403001
HIGHWAY : IH0010
COUNTY : EL PASO

TEXAS DEPARTMENT OF TRANSPORTATION

GOVERNING SPECIFICATIONS AND SPECIAL PROVISIONS

ALL SPECIFICATIONS AND SPECIAL PROVISIONS APPLICABLE TO THIS PROJECT ARE IDENTIFIED AS FOLLOWS:

STANDARD SPECIFICATIONS: ADOPTED BY THE TEXAS DEPARTMENT OF TRANSPORTATION NOVEMBER 1, 2014. STANDARD SPECIFICATIONS ARE INCORPORATED INTO THE CONTRACT BY REFERENCE.

ITEMS 1 TO 9 INCL., GENERAL REQUIREMENTS AND COVENANTS
ITEM 502 BARRICADES, SIGNS, AND TRAFFIC HANDLING
ITEM 730 ROADSIDE MOWING

SPECIAL PROVISIONS: SPECIAL PROVISIONS WILL GOVERN AND TAKE PRECEDENCE OVER THE SPECIFICATIONS ENUMERATED HEREON WHEREVER IN CONFLICT THEREWITH.

SPECIAL PROVISION "SCHEDULE OF LIQUIDATED DAMAGES" (000---001)
SPECIAL PROVISION "NONDISCRIMINATION" (000---002)
SPECIAL PROVISION "IMPORTANT NOTICE TO CONTRACTORS" (000---010)
SPECIAL PROVISION TO ITEM 6 (006---001)
SPECIAL PROVISIONS TO ITEM 7 (007---001)(007---003)

SPECIAL SPECIFICATIONS:

GENERAL: THE ABOVE-LISTED SPECIFICATION ITEMS ARE THOSE UNDER WHICH PAYMENT IS TO BE MADE. THESE, TOGETHER WITH SUCH OTHER PERTINENT ITEMS, IF ANY, AS MAY BE REFERRED TO IN THE ABOVE-LISTED SPECIFICATION ITEMS, AND INCLUDING THE SPECIAL PROVISIONS LISTED ABOVE, CONSTITUTE THE COMPLETE SPECIFICATIONS FOR THIS PROJECT.

CHILD SUPPORT STATEMENT

Under Section 231.006, Family Code, the vendor or applicant certifies that the individual or business entity named in this contract, bid, or application is not ineligible to receive the specified grant, loan, or payment and acknowledges that this contract may be terminated and payment may be withheld if this certification is inaccurate.

E-VERIFY CERTIFICATION

Pursuant to Executive Order RP-80, all state contracts for services must include a provision requiring Contractors to use the U.S. Department of Homeland Security's E-Verify system to determine employment eligibility. By signing the Contract, the Contractor certifies and ensures that for all contracts for services, Contractor will, to the extent permitted by law, utilize the United States Department of Homeland Security's E-Verify system during the term of the agreement to determine the eligibility of:

- All persons hired to perform duties within Texas during the term of the agreement; and
- All persons, including persons acting as or employed by subcontractors between the start of the agreement and its conclusion, assigned by the Contractor to perform work pursuant to the agreement.

Violation of this requirement shall constitute a material breach of the agreement.

Special Provision to Item 000
Schedule of Liquidated Damages

Table1
Schedule of Liquidated Damages

For Dollar Amount of Original Contract		Dollar Amount of Daily Contract Administration Liquidated Damages per Working Day
From More Than	**To and Including**	
0	100,000	**570**
100,000	500,000	**590**
500,000	1,000,000	**610**
1,000,000	1,500,000	**685**
1,500,000	3,000,000	**785**
3,000,000	5,000,000	**970**
5,000,000	10,000,000	**1125**
10,000,000	20,000,000	**1285**
20,000,000	Over 20,000,000	**2590**

Special Provision to Item 000
Nondiscrimination

1. DESCRIPTION

All recipients of federal financial assistance are required to comply with various nondiscrimination laws including Title VI of the Civil Rights Act of 1964, as amended, (Title VI). Title VI forbids discrimination against anyone in the United States on the grounds of race, color, or national origin by any agency receiving federal funds.

Texas Department of Transportation, as a recipient of Federal financial assistance, and under Title VI and related statutes, ensures that no person shall on the grounds of race, religion (where the primary objective of the financial assistance is to provide employment per 42 U.S.C. § 2000d-3), color, national origin, sex, age or disability be excluded from participation in, be denied the benefits of, or otherwise be subjected to discrimination under any Department programs or activities.

2. DEFINITION OF TERMS

Where the term “Contractor” appears in the following six nondiscrimination clauses, the term “Contractor” is understood to include all parties to Contracts or agreements with the Texas Department of Transportation.

3. NONDISCRIMINATION PROVISIONS

During the performance of this Contract, the Contractor, for itself, its assignees, and successors in interest (hereinafter referred to as the "Contractor") agrees as follows:

3.1. **Compliance with Regulations**. The Contractor (hereinafter includes consultants) will comply with the Acts and the Regulations relative to Nondiscrimination in Federally-assisted programs of the U.S. Department of Transportation, the Federal Highway Administration, as they may be amended from time to time, which are herein incorporated by reference and made a part of this Contract.

3.2. **Nondiscrimination**. The Contractor, with regard to the work performed by it during the Contract, will not discriminate on the grounds of race, color, or national origin in the selection and retention of subcontractors, including procurements of materials and leases of equipment. The Contractor will not participate directly or indirectly in the discrimination prohibited by the Acts and the Regulations, including employment practices when the Contract covers any activity, project, or program set forth in Appendix B of 49 CFR Part 21.

3.3. **Solicitations for Subcontracts, Including Procurements of Materials and Equipment:** In all solicitations, either by competitive bidding, or negotiation made by the Contractor for work to be performed under a subcontract, including procurements of materials, or leases of equipment, each potential subcontractor or supplier will be notified by the Contractor of the Contractor's obligations under this Contract and the Acts and the Regulations relative to Nondiscrimination on the grounds of race, color, or national origin.

3.4. **Information and Reports:** The Contractor will provide all information and reports required by the Acts, the Regulations, and directives issued pursuant thereto and will permit access to its books, records, accounts, other sources of information, and its facilities as may be determined by the Recipient or the Federal Highway Administration to be pertinent to ascertain compliance with such Acts, Regulations, and instructions. Where any information required of a Contractor is in the exclusive possession of another who fails or refuses to furnish the information, the Contractor will so certify to the Recipient or the Federal Highway Administration, as appropriate, and will set forth what efforts it has made to obtain the information.

3.5. **Sanctions for Noncompliance**. In the event of a Contractor's noncompliance with the Nondiscrimination provisions of this Contract, the Recipient will impose such Contract sanctions as it or the Federal Highway Administration may determine to be appropriate, including, but not limited to:

- withholding payments to the Contractor under the Contract until the Contractor complies, and/or
- cancelling, terminating, or suspending a Contract, in whole or in part.

3.6. **Incorporation of Provisions**. The Contractor will include the provisions of paragraphs (3.1) through (3.6) in every subcontract, including procurements of materials and leases of equipment, unless exempt by the Acts, the Regulations, and directives issued pursuant thereto. The Contractor will take action with respect to any subcontract or procurement as the Recipient or the Federal Highway Administration may direct as a means of enforcing such provisions including sanctions for noncompliance. Provided, that if the Contractor becomes involved in, or is threatened with litigation by a subcontractor, or supplier because of such direction, the Contractor may request the Recipient to enter into any litigation to protect the interests of the Recipient. In addition, the Contractor may request the United States to enter into the litigation to protect the interests of the United States.

4. PERTINENT NONDISCRIMINATION AUTHORITIES:

During the performance of this Contract, the Contractor, for itself, its assignees, and successors in interest (hereinafter referred to as the "Contractor") agrees to comply with the following nondiscrimination statutes and authorities; including but not limited to:

4.1. Title VI of the Civil Rights Act of 1964 (42 U.S.C. § 2000d et seq., 78 stat. 252), (prohibits discrimination on the basis of race, color, national origin); and 49 CFR Part 21.

4.2. The Uniform Relocation Assistance and Real Property Acquisition Policies Act of 1970, (42 U.S.C. § 4601), (prohibits unfair treatment of persons displaced or whose property has been acquired because of Federal or Federal-aid programs and projects);

4.3. Federal-Aid Highway Act of 1973, (23 U.S.C. § 324 et seq.), (prohibits discrimination on the basis of sex);

4.4. Section 504 of the Rehabilitation Act of 1973, (29 U.S.C. § 794 et seq.), as amended, (prohibits discrimination on the basis of disability); and 49 CFR Part 27;

4.5. The Age Discrimination Act of 1975, as amended, (42 U.S.C. § 6101 et seq.), (prohibits discrimination on the basis of age);

4.6. Airport and Airway Improvement Act of 1982, (49 U.S.C. § 4 71, Section 4 7123), as amended, (prohibits discrimination based on race, creed, color, national origin, or sex);

4.7. The Civil Rights Restoration Act of 1987, (PL 100-209), (Broadened the scope, coverage and applicability of Title VI of the Civil Rights Act of 1964, The Age Discrimination Act of 1975 and Section 504 of the Rehabilitation Act of 1973, by expanding the definition of the terms "programs or activities" to include all of the programs or activities of the Federal-aid recipients, subrecipients and Contractors, whether such programs or activities are Federally funded or not);

4.8. Titles II and III of the Americans with Disabilities Act, which prohibit discrimination on the basis of disability in the operation of public entities, public and private transportation systems, places of public accommodation, and certain testing entities (42 U.S.C. §§ 12131-12189) as implemented by Department of Transportation regulations at 49 C.F.R. parts 37 and 38;

4.9. The Federal Aviation Administration's Nondiscrimination statute (49 U.S.C. § 47123) (prohibits discrimination on the basis of race, color, national origin, and sex);

4.10. Executive Order 12898, Federal Actions to Address Environmental Justice in Minority Populations and Low-Income Populations, which ensures discrimination against minority populations by discouraging programs, policies, and activities with disproportionately high and adverse human health or environmental effects on minority and low-income populations;

4.11. Executive Order 13166, Improving Access to Services for Persons with Limited English Proficiency, and resulting agency guidance, national origin discrimination includes discrimination because of limited English proficiency (LEP). To ensure compliance with Title VI, you must take reasonable steps to ensure that LEP persons have meaningful access to your programs (70 Fed. Reg. at 74087 to 74100);

4.12. Title IX of the Education Amendments of 1972, as amended, which prohibits you from discriminating because of sex in education programs or activities (20 U .S.C. 1681 et seq).

Special Provision to Item 000
Important Notice to Contractors

By the 20th day of each month, report to the Engineer the number of incidents and injuries that occurred on the project the previous month. Report:

- the total number of incidents and injuries for the Contractor and all subcontractors, and
- the number of Contractor and subcontractor-related incidents and injuries that involved a third party.

An "incident" is defined as any work-related occurrence that caused damage only to vehicles, equipment, materials, etc.

An "injury" is defined as an OSHA recordable injury.

Acquire an Electronic Project Records System (EPRS) account to report incidents and injuries. Submit an EPRS User Access Request Form (Form 2451) to request an account. This form can be found at http://www.txdot.gov/business/resources/doing-business/prequalification.html.

Report injuries and incidents using the EPRS website located at https://apps.dot.state.tx.us/apps/eprs/InjuryIncident/InjryIncdt.aspx.

Failure to submit this information to the Engineers by the 20th day of each month will result in the Department taking actions including, but not limited to withholding estimates and suspending the work. This report will not be paid for directly, but will be considered subsidiary to Items of the contract.

Special Provision to Item 6
Control of Materials

For this project, Item 6, "Control of Materials," of the Standard Specifications, is hereby amended with respect to the clauses cited below, and no other clauses or requirements of this Item are waived or changed hereby.

Article 4., "Sampling, Testing, and Inspection," is supplemented by the following:

Meet with the Engineer and choose either the Department or a Department-selected Commercial Lab (CL) for conducting the subset of project-level sampling and testing shown in Table 1, "Select Guide Schedule Sampling and Testing." Selection may be made on a test by test basis. CLs will meet the testing turnaround times shown (includes test time and time for travel/sampling and reporting) and in all cases issue test reports as soon as possible.

If the Contractor chooses a Department-selected CL for any Table 1 sampling and testing:

- notify the Engineer, District Lab, and the CL of project scheduling that may require CL testing;
- provide the Engineer, District Lab, and CL at least 24 hours' notice by phone and e-mail;
- reimburse the Department for CL Table 1 testing using the contract fee schedule for the CL (including mileage and travel/standby time) at the minimum guide schedule testing frequencies;
- reimburse the Department for CL Table 1 testing above the minimum guide schedule frequencies for retesting when minimum frequency testing results in failures to meet specification limits;
- agree with the Engineer and CL upon a policy regarding notification for testing services;
- give any cancellation notice to the Engineer, District Lab, and CL by phone and e-mail;
- reimburse the Department a $150 cancellation fee to cover technician time and mileage charges for previously scheduled work cancelled without adequate notice, which resulted in mobilization of technician and/or equipment by the CL; and
- all CL charges will be reimbursed to the Department by a deduction from the Contractor's monthly pay estimate.

If the CL does not meet the Table 1 turnaround times, testing charge to the Contractor will be reduced by 50% for the first late day and an additional 5% for each succeeding late day.

Approved CL project testing above the minimum testing frequencies in the Guide Schedule of Sampling and Testing, and not as the result of failing tests, will be paid by the Department.

Other project-level Guide Schedule sampling and testing not shown on Table 1 will be the responsibility of the Department.

Table 1
Select Guide Schedule Sampling and Testing (Note 1)

TxDOT Test	Test Description	Turn-Around Time (Calendar days)
	SOILS/BASE	
Tex-101-E	Preparation of Soil and Flexible Base Materials for Testing (included in other tests)	
Tex-104-E	Liquid Limit of Soils (included in 106-E)	
Tex-105-E	Plastic Limit of Soils (included in 106-E)	
Tex-106-E	Calculating the Plasticity Index of Soils	7
Tex-110-E	Particle Size Analysis of Soils	6
Tex-113-E	Moisture-Density Relationship of Base Materials	7
Tex-114-E	Moisture-Density Relationship of Subgrade and Embankment Soil	7
Tex-115-E	Field Method for In-Place Density of Soils and Base Materials	2
Tex-116-E	Ball Mill Method for the Disintegration of Flexible Base Material	5
Tex-117-E, Part II	Triaxial Compression Tests For Disturbed Soils and Base Materials (Part II)	6
Tex-113-E **w/** Tex-117-E	Moisture-Density Relationship of Base Materials **with** Triaxial Compression Tests For Disturbed Soils and Base Materials (Part II)	10
Tex-140-E	Measuring Thickness of Pavement Layer	2
Tex-145-E	Determining Sulfate Content in Soils - Colorimetric Method	4
	HOT MIX ASPHALT	
Tex-200-F	Sieve Analysis of Fine and Coarse Aggregate (dry, from ignition oven with known correction factors)	1 (Note 2)
Tex-203-F	Sand Equivalent Test	3
Tex-206-F, **w/** Tex-207-F, Part I, **w/** Tex-227-F	**(Lab-Molded Density of Production Mixture – Texas Gyratory)** Method of Compacting Test Specimens of Bituminous Mixtures **with** Density of Compacted Bituminous Mixtures, Part I - Bulk Specific Gravity of Compacted Bituminous Mixtures, **with** Theoretical Maximum Specific Gravity of Bituminous Mixtures	1 (Note 2)
Tex-207-F, Part I **&/or** Part VI	**(In-Place Air Voids of Roadway Cores)** Density of Compacted Bituminous Mixtures, Part I- Bulk Specific Gravity of Compacted Bituminous Mixtures **&/or** Part VI - Bulk Specific Gravity of Compacted Bituminous Mixtures Using the Vacuum Method	1 (Note 2)
Tex-207-F, Part V	Density of Compacted Bituminous Mixtures, Part V- Determining Mat Segregation using a Density-Testing Gauge	3
Tex-207-F, Part VII	Density of Compacted Bituminous Mixtures, Part VII - Determining Longitudinal Joint Density using a Density-Testing Gauge	4
Tex-212-F	Moisture Content of Bituminous Mixtures	3
Tex-217-F	Deleterious Material and Decantation Test for Coarse Aggregate	4
Tex-221-F	Sampling Aggregate for Bituminous Mixtures, Surface Treatments, and LRA (included in other tests)	
Tex-222-F	Sampling Bituminous Mixtures (included in other tests)	
Tex-224-F	Determination of Flakiness Index	3
Tex-226-F	Indirect Tensile Strength Test (production mix)	4
Tex-235-F	Determining Draindown Characteristics in Bituminous Materials	3
Tex-236-F (Correction Factors)	Asphalt Content from Asphalt Paving Mixtures by the Ignition Method (Determining Correction Factors)	4
Tex-236-F	Asphalt Content from Asphalt Paving Mixtures by the Ignition Method (Production Mixture)	1 (Note 2)
Tex-241-F **w/** Tex-207-F, Part I, **w/** Tex-227-F	**(Lab-Molded Density of Production Mixture – Superpave Gyratory)** Superpave Gyratory Compacting of Specimens of Bituminous Mixtures (production mixture) **with** Density of Compacted Bituminous Mixtures, Part I- Part I - Bulk Specific Gravity of Compacted Bituminous Mixtures, **with** Theoretical Maximum Specific Gravity of Bituminous Mixtures	1 (Note 2)
Tex-242-F	Hamburg Wheel-Tracking Test (production mix, molded samples)	3
Tex-244-F	Thermal Profile of Hot Mix Asphalt	1
Tex-246-F	Permeability of Water Flow of Hot Mix Asphalt	3
Tex-280-F	Flat and Elongated Particles	3
Tex-530-C	Effect of Water on Bituminous Paving Mixtures (production mix)	4

AGGREGATES		
Tex-400-A	Sampling Flexible Base, Stone, Gravel, Sand, and Mineral Aggregates	3
Tex-410-A	Abrasion of Coarse Aggregate Using the Los Angeles Machine	5
Tex-411-A	Soundness of Aggregate by Use of Sodium Sulfate or Magnesium Sulfate	12
Tex-461-A	Degradation of Coarse Aggregate by Micro-Deval Abrasion	5
CHEMICAL		
Tex-612-J	Acid Insoluble Residue for Fine Aggregate	4
GENERAL		
HMA Production Specialist [TxAPA – Level 1-A] ($/hr)		
HMA Roadway Specialist [TxAPA – Level 1-B] ($/hr)		
Technician Travel/Standby Time ($/hr)		
Per Diem ($/day – meals and lodging)		
Mileage Rate ($/mile from closest CL location)		

Note 1– Turn-Around Time includes test time and time for travel/sampling and reporting.
Note 2 – These tests require turn-around times meeting the governing specifications. Provide test results within the stated turn-around time. CL is allowed one additional day to provide the signed and sealed report.

Special Provision to Item 7
Legal Relations and Responsibilities

Item 7, "Legal Relations and Responsibilities," of the Standard Specifications is amended with respect to the clauses cited below. No other clauses or requirements of this Item are waived or changed.

Section 7.2.6.5, "Training," is supplemented by the following:

Coordinate enrollment, pay associated fees, and successfully complete Department-approved Training or Contractor-developed Training. Training is valid for the period prescribed by the provider. If no training period is prescribed by the provider, then training is valid for 3 yrs. from the date of completion. The Engineer may require training at a frequency in lieu of the period prescribed based on the Department's needs. Training and associated fees will not be measured or paid for directly but are considered subsidiary to pertinent Items.

2.6.5.1. **Department-approved Training.** Department-approved training is listed below. For Section 7.2.6.5.1.4., "Other Work Zone Personnel", the Contractor may use Contractor-developed Training in lieu of Department-approved Training.

2.6.5.1.1 **Contractor Responsible Person and Alternate.**

Provider	Course Title
American Traffic Safety Services Association	Traffic Control Supervisor
National Highway Institute[1]	Design and Operation of Work Zone Traffic Control, Work Zone Traffic Control for Maintenance Operations
Texas Engineering Extension Service	Work Zone Traffic Control for CRPs
University of Texas Arlington, Division for Enterprise Development	Traffic Control Supervisor

1. Both classes are required in order to equal the level of training taught in a single class by other providers.

2.6.5.1.2. **Flagger Instructor Training.**

Provider	Course Title
American Traffic Safety Services Association	Flagging Instructor Training
Texas Engineering Extension Service	Train-the-Trainer Flaggers
National Safety Council	Flagger Instructor Training
University of Texas at Arlington, Division for Enterprise Development	Certified Instructor: Qualified Flagger Training

Flagger Training.

Provider	Course Title
Texas Engineering Extension Service	Flaggers in the Work Zone
National Safety Council	Work Zone Flagger (Flagger Novice)
University of Texas Arlington, Division for Enterprise Development	Flaggers in Work Zones
University of Texas at Arlington, Division for Enterprise Development	Work Zone Traffic Control & Qualified Flagger
Associated Builders and Contractors, Austin Chapter	Flagger Training

2.6.5.1.3. Law Enforcement Personnel.

Provider	Course Title
National Highway Institute	Safe and Effective Use of Law Enforcement Personnel in Work Zones

2.6.5.1.4. Other Work Zone Personnel.

Provider	Course Title
American Traffic Safety Services Association	Traffic Control Technician
Texas Engineering Extension Service	Work Zone Traffic Control
National Highway Institute	Maintenance of Traffic for Technicians
National Highway Institute	Maintenance Training Series: Basics of Work Zone Traffic Control
University of Texas at Arlington, Division for Enterprise Development	Temporary Traffic Control

2.6.5.2. **Contractor-developed Training.** Develop and deliver Contractor-developed Training meeting the minimum requirements established by the Department. The outline for this training must be submitted to the Engineer for approval at the preconstruction meeting. The CRP or designated alternate may deliver the training in lieu of the Department-approved training. The work performed and materials furnished to develop and deliver the training will not be measured or paid for directly but will be considered subsidiary to pertinent Items.

2.6.5.2.1 **Flagger Training Minimum Requirements.** A Contractor's certified flagging instructor is permitted to train other flaggers.

2.6.5.2.2 **Other Work Zone Personnel Minimum Requirements.** Contractor-developed Training must provide information on the use of personnel protection equipment, occupational hazards and health risks, and other pertinent topics related to traffic management. The type and amount of training will depend on the job duties and responsibilities. Develop training applicable to the work being performed. Develop training to include the following topics:

- The Life You Save May Be Your Own (or other similar company safety moto)
- Purpose of the Training
  - It's The Law

- To make work zones safer for workers and motorist
- To understand what is needed for traffic control
- To save lives including your own

- Personal and Co-Worker Safety
  - High Visibility Safety Apparel: Discuss compliant requirements; Inspect regularly for fading and reduced reflective properties; If night operations are required, discuss the additional and appropriate required apparel in addition to special night work risks; If moving operations are underway, discuss appropriate safety measures specific to the situation and traffic control plan.
  - Blind Areas: A blind area is the area around a vehicle or piece of construction equipment not visible to the operators, either by line of sight or indirectly by mirrors. Discuss the "Circle of Safety" around equipment and vehicles; Use of spotters; Maintain eye contact with equipment operators; Use of hand signals.
  - Runovers and Backovers: Remain alert at all times; Keep a safe distance from traffic; Avoid turning your back to traffic and if you must then use a spotter; Stay behind protective barriers, whenever possible. Note: It is not safe to sit on or lean against a concrete barrier, these barriers can deflect 4+ feet when struck by a vehicle.
  - Look out for each other, warn co-workers
  - Be courteous to motorists
  - Do not run across active roadways
  - Workers must obey traffic laws and drive courteously while operating vehicles in the work zones.
  - Workers must be made aware of company distracted driving policies
- Night Time Operations: Focus should be placed on projects with a nighttime element.
- Traffic Control Training: Basics of Traffic Control.
  - Identify Work Zone Traffic Control Supervisor and other appropriate persons to report issues to when they arise.
  - Work Zone Traffic Control Devices must be in clean and in undamaged condition. If devices have been hit but not damaged, put back in their correct place and report to traffic control supervisor. If devices have been damaged, replace with new one and report to traffic control supervisor. If devices are dirty, faded or have missing or damaged reflective tape clean or replace and report to traffic control supervisor. Show examples of non-acceptable device conditions. Discussion on various types of traffic control devices to be used and where spacing requirements can be found.
  - Channelizing Devices and Barricades with slanted stripes: Stripes are to slant in the direction you want traffic to stay or move to; Demonstrate this with a device.
  - Traffic Queuing: Workers must be made aware of traffic queuing and the dangers created by it. Workers must be instructed to immediately notify the traffic control supervisor and other supervisory personnel if traffic is queuing beyond advance warning sign and devices or construction limits.
  - Signs: Signs must be straight and not leaning. Report problems to the traffic control supervisor or other as designated for immediate repair. Covered signs must be fully covered. If covers are damaged or out of place, report to traffic control supervisor or other as designated.

Special Provision to Item 7
Legal Relations and Responsibilities

Item 7, "Legal Relations and Responsibilities" of the Standard Specifications is amended with respect to the clauses cited below. No other clauses or requirements of this Item are waived or changed.

Article 7.3., "Laws To Be Observed," is supplemented by the following:

By entering into Contract, the Contractor expressly grants and allows the Department and all other interested federal and state agencies access to all Contractor records related to the Contract, record-keeping systems, and any information considered relevant. Failure to provide access may result in action by the Department.

This page intentionally left blank.

CONTRACT NO.	**10152403**
CONTROL	**6294-03-001**
PROJECT	**RMC - 629403001**
HIGHWAY	**IH0010**
COUNTY	**EL PASO**

THE STATE OF TEXAS
THE COUNTY OF TRAVIS

HIGHWAY MAINTENANCE IMPROVEMENT CONTRACT

This agreement is made by and between the State of Texas, represented by the Executive Director, Texas Department of Transportation, party of the first part, and **E. G. L. CONSTRUCTION, INC.** , its executors, administrators, heirs, successors or assigns, the Contractor, party of the second part.

WHEREAS, the State desires to enter into a contract for the highway improvement as shown and described in the plans, specifications and special provisions included or referenced herein or as far as the money available will construct or maintain in accordance with the provisions of the State Statutes, and

WHEREAS, the Contractor has been engaged in and now does such work and represents that it is fully equipped, competent and capable of performing the desired and herein outlined work and is ready and willing to perform such work in accordance with the unit prices listed herein and the provisions of the herein included or referenced specifications, special provisions and plans, now

WITNESSETH: That for and in consideration of the unit prices listed herein, a part of this contract, the Contractor agrees to do, at its own proper cost and expense, all the work necessary for the highway improvement as shown and described in the plans and in accordance with the provisions of the referenced specifications and special provisions which are a part of this contract.

Time for completion of this contract shall be computed beginning as instructed in the authorization to begin work. The work to be performed under this contract shall be completed in **60 WORKING** days.

And the State in consideration of the full and true performance of said work by the Contractor hereby agrees and binds itself to pay to the Contractor for the quantities of work performed in compliance with this contract at the respective unit prices set forth herein, subject to adjustment as herein provided. The following items of work and respective unit prices are those contained in the original proposal and are a part of this contract. The State limits its obligation hereunder to the funds available.

This page intentionally left blank.

PROJECT: RMC - 629403001 CCSJ BIDDER DATE DIV JOB
COUNTY : EL PASO 629403001 1 10 15 403

ITEM NO.	DESC CODE	SP. NO.	ITEM DESCRIPTION UNIT	APPROX. QUANT.	UNIT BID PRICE	EXTENSION
502	6015		FURN ADDITIONAL TRUCKMOUNT ATTENUATOR			
			HR	25.000	65.000	1,625.00
730	6001		STRIP MOWING			
			AC	394.000	45.000	17,730.00
730	6002		FULL - WIDTH MOWING			
			AC	616.000	80.000	49,280.00
					TOTAL	68,635.00

This page intentionally left blank.

CONTRACT NO. 10152403
COUNTY EL PASO

The Contractor warrants that it has not employed or retained any company or persons, other than a bona fide employee working solely for the contractor, to solicit or secure this contract and that it has not paid or agreed to pay any company or individual any fee, commission, percentage, brokerage fee, gifts, or any other consideration, contingent upon or resulting from the award or making of this contract. For breach or violation of this warranty, the State shall have the right to annul this contract without liability or, in its discretion, to deduct from the contract price or compensation, or otherwise recover, the full amount of such fee, commission, percentage, brokerage fee, gift or contingent fee.

The contractor agrees that any payments owing under this contract will be applied towards the debt or delinquent taxes owed to the state until the debt or delinquent taxes are paid in full.

It is acknowledged and agreed by the parties hereto that this contract is the full and complete contract for the performance of the work called for and described herein.

IN WITNESS WHEREOF, the parties hereto have set their hands the date herein named.

STATE OF TEXAS
Party of the First Part

Executed for the Executive Director and approved for the Texas Transportation Commission for the purpose and effect of activating and/or carrying out the orders, established policies, or work programs approved and authorized by the Texas Transportation Commission.

By Robert Bielek, P.E. Date 11/10/2015

ROBERT BIELEK, DISTRICT ENGINEER
(Typed, Printed or Stamped Name and Title)

RECOMMENDED FOR EXECUTION:

CONTRACTOR
Party of the Second Part

E. G. L. CONSTRUCTION, INC.

By: Mario L Escobedo President (Title) 11/3/15 (Date)

By: (Title) (Date)

By: (Title) (Date)

This page intentionally left blank.

PAYMENT BOND

CONTRACT NO. 10152403
COUNTY EL PASO
BOND NO. 4401540

KNOW ALL PERSONS BY THESE PRESENTS:

That we **E. G. L. CONSTRUCTION, INC.** as principal, and the other undersigned as surety, are held and firmly bound unto the State of Texas, in the penal sum of **sixty-eight thousand six hundred thirty-five and 00/100** Dollars (**$68,635.00**), lawful money of the United States, well and truly to be paid to the State of Texas, and we bind ourselves, our heirs, successors, executors, and administrators jointly and severally, firmly by these presents.

Whereas, the above bounden principal has entered into the foregoing contract with the State of Texas attached hereto, and whereas, under the law said **Principal** is required before commencing the work provided for in said contract to execute a bond in the amount of said contract solely for the protection of all claimants, as defined by the Texas Government Code Title 10, Chapter 2253, or successor statutes, in the prosecution of the work provided for in said contract supplying labor and materials as defined by law, in the prosecution of the work provided for in said contract, for the use of each such claimant.

The condition of this obligation is such that if the above bounden principal, his or its heirs, successors, executors, and administrators shall well and faithfully make payment to each and every claimant as defined by law, supplying labor and materials as defined by law, in the prosecution of the work provided for in said contract and any and all duly authorized changes to said contract that may hereafter be made, notice of such changes to the **Surety(s)** being hereby waived, then this obligation shall be null and void, otherwise it shall remain in full force and effect.

WITNESS our hand this, 27TH day of OCTOBER, 20 15.

E. G. L. CONSTRUCTION, INC.

By: Mario A Escobedo President
(Title)

SURETY (Print Firm Name and Seal)

*By: _____
(Title)

By: _____
(Title)

SURETEC INSURANCE COMPANY
SURETY (Print Firm Name and Seal)

SURETY (Print Firm Name and Seal)

*By: _____
PAUL D. GILCREASE, (Title)
ATTORNEY-IN-FACT

*By: _____
(Title)

*Note: A Power of Attorney, showing that the surety officer or Attorney-In-Fact has authority to sign such obligation, must be impressed with the corporate seal and attached behind the Payment Bond in each contract.

This form has been approved by the ATTORNEY GENERAL OF TEXAS & TEXAS DEPT. OF INSURANCE.

This page intentionally left blank.